POL00031231

BA/HORIZON STRATEGY REVIEW

[BA/Horizon Strategy Review]

POL00031231

BA/HORIZON STRATEGIC REVIEW
OCTOBER 1997

1 INTRODUCTION

1.1 Terms of Reference

The genesis of this report lies in a set of terms of reference written by Paul Rich on 15 August 1997 and reproduced as Appendix 1.

Three specific situations were suggested for detailed scoping:

- What if BA pulled out of Horizon completely?
- What if BA pulled out of the BES (electronic card) functionality and opted instead for OBCS (bar coded foils)?
- What if BA insisted on waiting until Horizon was installed throughout POCL's network before they will commit to participate?

But there is a wider context that drove the work leading to this report:

- The Horizon programme has encountered repeated delays and setbacks. There is a need to clarify whether those delays have, or are likely, to lead to a critical diminution of benefits for POCL and BA/Pathway. There was also a need to understand what options might face the three partners should the programme continue to hit turbulence.
- POCL has started to review its medium term strategy and the role of Horizon within any new strategy needs to be clarified.
- Several scenarios were scoped to explore contingencies for all parties including the option for BA of attempting to introduce compulsory ACT or simply accelerating through incentivisation the take up of voluntary ACT.

POL00031231

1.2 Structure of Report

The report attempts to crystallize the key arguments which are then detailed in a series of appendices. Further background data has been collated into a reference file for future use. A Management Summary at section 2 gives high line conclusions which are then covered in more detail in section 5.

1.3 Team Composition and Modus Operandi

The team consisted of Dave Morphey; Dave Miller: Tim O'Leary (consultant); Kevin Corrigan; Bernie O'Keeney; Nevhis Gardner and Bert Bertoloni. Extensive interviews were held with a wide range of managers spanning the commercial, financial and technical aspects of the programme. The data used to arrive at the conclusions has been checked back with appropriate managers.

1.4 Perhaps inevitably this report becomes, in effect, a feed into some further review activity highlighted in the Management Summary and Next Steps.

2 MANAGEMENT SUMMARY

2.1 Horizon remains crucial to POCL's commercial strategy. It is needed as soon as possible and requires the full functionality as currently defined, or improved within acceptable time limits, and is needed throughout the network.

2.2 BA cannot unilaterally pull out of the Horizon contract framework.

2.3 It would be commercially unacceptable to both Pathway and POCL to continue to implement Horizon without a formal and continued commitment from the start on the part of BA. Therefore any attempt by BA to withhold full commitment until end of roll-out must be resisted.

POL00031231

2.4 PA Consultants report on the status of the programme and its obstacles indicates that much improvement is needed in the way in which the programme is managed but their conclusions do not suggest the programme is fatally flawed.

2.5 Delay to the completion of Horizon certainly enables competitors to attack POCL's share and continued erosion of income and market share is inevitable. However, there has been no evidence that delays within the broad timescales under review present any market "show stoppers".

2.6 The impact of delays on business cases is variable. For POCL the effect is to improve the NPV and ease the short term profit gap. For BA and Pathway it is believed to worsen both the business case and the impact on their P&L. However, if the original assumptions are retained, eg full fraud benefit to BA, the cases remain strong.

2.7 POCL has an affordability problem with the on-going non-BA related costs of some £65 to 80m pa. There has been however no financial benefits from the use of EPOSS and potential for vertical integration built into the Business Plan as yet.

2.8 The delays give, potentially, an opportunity to scope the apparent duplication of functionality between, for example, EPOSS and TMS/TIP. Indeed EPOSS itself has been defined as a derivative of ECCO Plus. There may be an industry standard generic system, such as Global Store, that might be more reliable and cost effective than developing EPOSS and AP as defined.

The Strategic decision for POCL to directly carry out data handling to clients (rather than using Pathway's PAS system) could warrant a further analysis.

Provided the work could be done without further delaying Horizon, there could be some cost saving achievable by re-defining these functionalities.

POL00031231

2.10 The ACT argument has been reviewed from the 92/93 assessment. The conclusions are:

(a) Despite an improved Treasury case, driven by the avoided Pathway charges, the net saving remains politically modest at £130m pa (steady state) whilst the political challenges remain considerable. A subsidy of some £288m pa would be needed for POCL and that would still not guarantee the network. Even with 500 Crowns and 4500 SPSO closures POCL would still need some £200m pa subsidy with every likelihood of further uncontrolled closures.

(b) Were BA to pursue compulsory ACT it would be virtually impossible for them to eliminate the "rump" of foil-based beneficiaries which BA estimate at around 30% of the market. POCL could provide a route, should ministers be inclined to mandate both POCL and beneficiaries to operate a kind of account, but only with a fully automated on line network.

(c) Accelerating the take up of voluntary ACT appears the most likely option. This would almost certainly need some form of financial incentive and the likely level of penetration might only yield a saving of around £20m pa by year 5. However it remains a tempting and politically relatively pain free route.

POL00031231

OVER-RIDING CONCLUSION

HORIZON IS ESSENTIAL TO POCL TO ACHIEVE SOME STABILITY IN INCOME OVER THE MEDIUM TERM AND TO SUPPORT FURTHER MARKET EXPLORATION.

BUT THERE IS INEXORABLE BUSINESS DECLINE, PARTICULARLY WITH BA. THIS DECLINE IN VOLUME AND FOOTFALL IS MASKED UNTIL 2005 BY THE BENEFICIAL CONTRACT "A" WHICH PROTECTS INCOME. THE PRECISE SHARE AND LEVEL OF VOLUME DECLINE WILL NEED FURTHER SCOPING.

THERE APPEARS AN URGENT NEED FOR POCL TO RETHINK ITS VISION, STRATEGIES AND STRUCTURE SO AS TO BECOME FAR LESS DEPENDENT ON GOVERNMENT BUSINESS BY 2005.

3 CONTEXT

3.1 Horizon was originally planned to roll out from June 97. It now looks as if Jan 99 is the very earliest achievable start to roll out and there remain some technical difficulties to be overcome.

3.2 The three partners, BA; POCL and Pathway, jointly sponsored a review by PA Consulting who reported in Sept 97. A copy of their report is at Appendix 2.

Broadly PA's conclusions are that the programme is more complex than any party may have appreciated; that significant improvements need to be made in the overall management of the programme; that there are no easy solutions (including withdrawal); that an attempt should be made to simplify or descope the technical platform if possible and that top level commitment will be essential to success. They do not conclude that the programme is fatally flawed.

POL00031231

PA cite three "root causes" to the problems experienced to date:

- Conflicting agenda
- Marginal business cases
- PFI approach

They recommended a way forward based on a series of facilitated workshops involving top management (CEO level) from each partner. The first of these is scheduled for 23/24 Oct 97.

3.3 BA have had some considerable difficulty developing their CAPs programme, essential as a data input to Horizon. They are also under financial pressure on their PES budgets, no doubt exacerbated by the lack of any financial benefits on either fraud or admin savings to date (other than via ALPs). BA have formally asked for financial help from both Pathway and POCL. Both requests denied at time of writing.

Contract "A" between POCL and BA guarantees income to POCL even if volume falls below prescribed "floor limits". This continues to mid 2005 and must be seen by BA as an unhelpful factor for them during Horizon delays. It could also impede any major Government review of the Welfare system although there are likely to be much greater considerations than POCL's contract!

ACT remains BA's preferred route and they must be feeling an even greater sense of frustration now than in 92/93 that Government would not support the move to compulsory ACT.

POL00031231

3.4 Legal and Contractual issues

POCL has separate contracts 'A' for counter services with Benefits Agency (BA) and Social Security Agency (SSA) in Great Britain and Northern Ireland respectively. The services provided by POCL under Contract A are the provision of approximately 19,200 post offices and 65,000 staff and agents to encash benefits, transport and arrange the money to pay out customers, enforce manual and electronic stop notices, account and settle for benefit payments, audit provisions, the distributions of leaflets to beneficiaries and the provision of publicity space.

The key commercial advantages to POCL of Contract A is:

- long term relationship it provides with key core clients
- prices rise in line with RPI (but see 1% efficiency below)
- POCL has a minimum guaranteed income stream irrespective of actual volume achieved through a floor mechanism in BA's contract and the minimum price arrangement in SSA's contract
- should volume increase, POCL's income would increase
- compensation for the expected extra associated transaction time of electronic benefit payments (either card or order book) through higher unit charges, and
- excepting a change of Government policy or POCL not being able to provide an outlet in a locality, BA and SSA will not seek other outlets for paying benefits

POL00031231

Key commercial disadvantages to POCL of Contract A is:

- charges have a 1% year on year efficiency built into them
- contracts with BA, SSA and Pathway now do not have coterminous end dates
- an uncapped risk for fraud exposure for electronic benefit payments where POCL fails to follow the correct procedures but there is a review checkstep should overall fraud rise to £5m
- a restriction on promoting POCL for benefit payments
- a commitment to a good faith review and negotiation should the network size fall below 17,339 in Great Britain or 580 in Northern Ireland and
- final months charge (May 2005) is on a per transaction basis without any floor.

Attached at Appendix 9 is a description of the suite of contracts between BA, SSA, Pathway and POCL.

3.5 Market Position

- **Bill Payment**: Competition is already rampant and likely to increase. POCL has put in place a programme of APT redeployment and an urgent scoping of the case for additional terminals in order to keep abreast of market demands. This will obviously continue until Horizon is available. Provided delays do not become interminable there is not at present a significant commercial risk from the current programme projection.

POL00031231

- **Royal Mail**: Some continued decline from their pursuit of an alternative channel strategy. However most unlikely that this client would walk away (even if allowed) and there are some real benefits to Royal Mail from improved sales data via EPOSS.

- **Girobank**: The main effect of delay is the knock on effect on developing a POCL based personal banking offer. Corporate deposit business would be fatally hit by a significant loss in BA business but not unduly damaged by a delay to Horizon.

- **National Savings**: Very keen to develop their individual accounts on an automated platform but now had to be put on hold pending programme delays. This is a relatively small (c£50m) contract but significantly profitable to POCL.

- **DVLA**: Shrouded in politics it is difficult to scope this one accurately. Logic says that with an automated platform and a willingness amongst ministers to see a thinning down of resources in South Wales POCL should be in a strong position to integrate vertically into this client. Delay is not helping but is also not fatal at present.

- **Bank of Ireland (B de C)**: Opportunity to bypass their UK operation and streamline the flow of cash would be worth a few million pounds to POCL. Delay puts this off.

- **New Business Development**: On line ticketing opportunity is delayed as are any serious attempts to engage partners who need an automated platform. More importantly perhaps the focus on Horizon over the last twelve months has brought a virtual halt to speculative business development.

POL00031231

- **Year 2000**: All clients, existing and prospective, are rapidly becoming absorbed in the Year 2000 systems scare. Considerable expenditure and specialist resource will be directed to this inescapable scenario. This means there is likely to be a fairly narrow window for POCL to develop systems changes within clients' infrastructure before they choose to divert the focus on to Year 2000. We may already be too late to do much with clients until after the end of 1999 and even then we may not be their highest priority.

Summary

Whilst no account teams have indicated potential "drop dead" timescales for further Horizon delays it is clear that erosion of existing business will continue and development of new opportunities may now be delayed until after 2000. The bill payment market is being addressed on a contingency basis but would be greatly enhanced by universal availability of this facility (provided clients were prepared to pay a premium for using POCL).

Full functionality is still seen as essential even though financial benefits have not yet appeared in the Business Plan. Some of the £65 to 80m pa costs may need to be seen as strategic infrastructure investment if POCL is determined to compete in the High Street.

3.6 Generic Transactions

POCL's Information Systems Strategy has for some time referred to the potential value of defining generic transactions as a basis for automating the front-end service.

POL00031231

These generic transactions could be defined as:

- in-payment
- out-payment
- personal details capture
- retail industry EPOSS (includes stock control data, means of payment and integration of public/private side business)
- token management

Horizon as currently defined covers much of this ground but on bespoke rather than generic basis. The implication is that future new business, even simply additional clients, may prove costly to bring on board.

There is evidence of "industry standard" systems used by major retailers. Global Store, developed by ICL, is currently used by Marks & Spencer for example.

It would be worthwhile to use the current delays to the programme to re-examine whether a generic system such as Global Store might prove cost effective/reliable than continuing to develop EPOSS and AP.

3.7 Summary

BA cannot easily pull out of Horizon unilaterally and would forego the opportunity of finally getting rid of foils if they did. But they do have financial pressures and are likely to want to explore any options that could save them money in the short term. Horizon delay continues with even Jan 1999 looking at risk. Such delay is painful to POCL but not fatal. APT extension provides much needed interim support but is no long term solution for this market. There remain questions around the fit of Horizon with POCL's IS strategy.

POL00031231

4 POCL'S STRATEGIC DRIVERS

This section reviews the key drivers for automation in POCL, some placed upon it by the Post Office Board and others developed within POCL to address market/operational needs. If the case for Horizon is to remain robust it must be seen to flow from this logic pattern.

4.1 PO Board Non-Negotiables

At the start of the authorisation process the Board agreed the following as, in a sense, their requirements of automation in POCL:

- Acceptable business case for POCL and The Post Office.
- Customers perceive no material worsening of service.
- No damage to PO brand.
- POCL retains control of critical operations and key commercial relationships.
- Capability for POCL to automate all clients and develop new services.
- Automation of all post offices within reasonable time.
- Chosen supplier has financial and technical capability to develop and deliver services.

4.2 POCL's Key Strategic Drivers

Fig 1 illustrates the logic pattern for deriving the need for Horizon based on a few essential requirements for POCL.

POL00031231

Fig 1 Key Strategic Drivers

• Must lock in BA		• Need Benefit Payment Card
• Must replace manual cash account		• Need EPOSS
• Must defend bill payment market	• Need AP	• Need Horizon
• Need new revenue streams		• Need platform for re-engineering products
• Need common, reliable easy to use solution		• Need single office platform

(a) Locking in BA

BA represent currently some 30% of POCL's volume and income and probably even more of its footfall. Income is protected to a fair degree by Contract "A" which includes volume "floor limits" below which POCL's income is unaffected. It is important to recognise that at present BA business not only underpins a very substantial part of POCL's income but the footfall drives significantly the type of customer loyalty that supports bill payment, stamp sales and other ancillary services.

To lock in BA requires a major change to their benefits method of payment. Foils are expensive to produce, distribute, encash and reconcile. Full benefits to BA of eliminating fraud, reducing admin costs and accounting for public expenditure are only available by full ACT, an electronic card system or a combination of both. It follows that a key driver for POCL to retain a significant proportion of its income and traffic over the next few years is to provide BA with BES functionality and USABLE THROUGHOUT THE NETWORK.

This in itself demands a platform virtually identical to Horizon.

POL00031231

(b) Replacing the manual cash account

It will always be difficult to get a definitive statement on this but there appears sufficient evidence that POCL's current accounting system is not fully fit for purpose. Current systems are error prone and incur significant costs to clean up the data before it becomes management information, or used for settlement with clients. The parallel automation projects, TIP/TMS, SAPCON, SAPADS all need a source of electronic transaction data to enable them to operate effectively and deliver the benefits in their individual business cases. This is not to say that there might not be alternative routes to achieving these functionalities but, given the need for the platform for BA it remains logical to use that same platform for EPOSS. This functionality appears to duplicate part of that of TIP/TMS and there is a need to review that to see if better value for money is achievable.

POCL has always suffered from slow, sometimes inaccurate management information of inadequate granularity. The need to squeeze out operational improvements both at outlet level and within the Business' logistics requires a consistent, once only capture of transactional data from outlets. The need to avoid the complexities of dual information streams both for POCL and its clients drives the conclusion that EPOSS is inescapable, albeit further refinements might be possible if time permits.

(c) Defending the bill payment market

The value of this market to POCL seems to be in three areas. Income from clients as long as prices remain above LRMC; Footfall that supports customer loyalty and ancillary transactions (Note: this sector feeds from BA footfall but is also a generator in its own right); Cash brought into the network and subsequently used to make outpayments including BA benefits.

POL00031231

By 2002/3 it is estimated to be worth some £185m income to POCL assuming a Horizon or similar platform.

Competition is very active with PayPoint spearheading currently the drive to divert footfall from post offices. POCL has the ability, with an automated platform, of offering clients an expanded service compared to PayPoint as well as wider reach (although not opening hours).

The current platform represents a vital stop gap to keep POCL's credibility in this market but the Hybrid platform on which the service depends has a limited capacity and life.

AP functionality is essential to sustain market share and the potential is needed to offer clients reach across the whole of the network.

(d) New revenue streams

Indications so far are, not surprisingly, that significant new opportunities such as a viable "low average value" account and on-line ticketing require an on-line automated platform. Certainly the MIS requirements of these new clients will assume an EPOSS type facility to ensure both speed and granularity of data.

Much of the sterling work done to date on business development has had to base itself on "bespoke" solutions. The efficient way forward has to be based on a set of powerful generic transactions that would require minimum refining to support new services. Not only is the conclusion that POCL needs an automated platform but that platform needs to be "future proofed" sufficiently to support new revenue opportunities.

POL00031231

(e) A common, simple to operate and reliable solution

There is limited space on counters for multiple platforms and relegation to back shelf, or even back office, causes unacceptable delays to service in all but the smallest outlets.

The demand on front line staff is sometimes underestimated. On the basis that we should make it easier for the clerk to get it right than to get it wrong, any platform(s) installed must be simple to operate and as error proof as possible. A single platform has much to recommend it.

Whilst it would no doubt be feasible to have multiple data streams feeding into POCL's back end systems this must inevitably lead to potential delays and the possibility of errors. Again the logic points to a single platform in each outlet.

The arguments for and against a **common** platform are more difficult. Provided data flows remained identical and basic operating procedures were common there could be arguments for different, perhaps simpler and presumably cheaper hardware in smaller outlets. The criticality of comparative costs and timescales would need to be assessed.

In summary, a single platform throughout the network is essential but it may prove commercially sensible to simplify the hardware in small offices as long as functionality and ease of operation are preserved.

4.3 Summary

- POCL's key strategic drivers do not conflict with, indeed are complementary to, the PO Board non-negotiables.

- Each key driver points strongly to the need for a platform very similar to Horizon

POL00031231

- Equally strong indications are that full functionality is required across the full network. This is explored further in Section 5.

4.4 The picture emerges

Figure 2 illustrates the thought process that might take us from current operations to the right decisions on the type and reach of an automated platform.

POL00031231

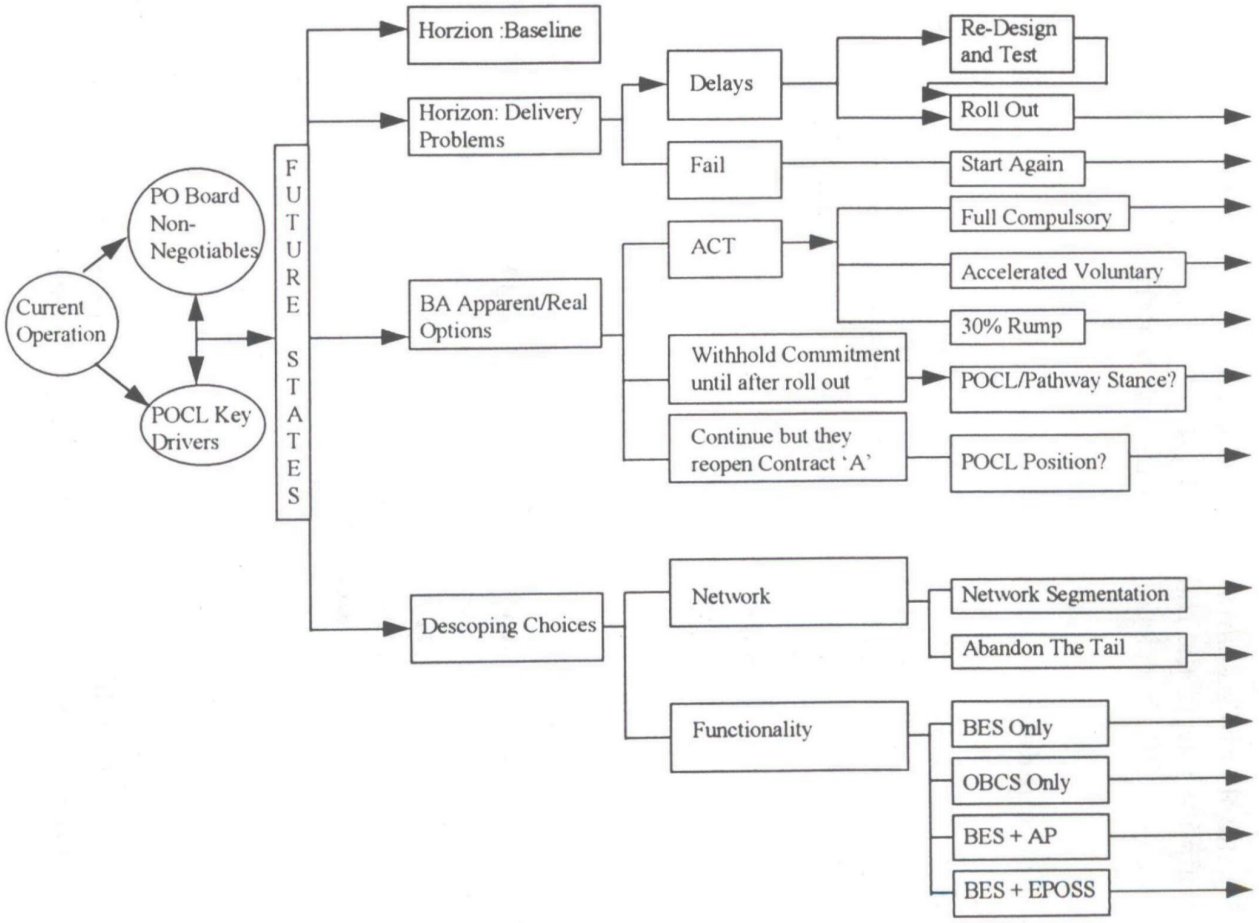

POL00031231

5 CONTINGENCY SCENARIOS

A number of scenarios were scoped to attempt to understand better the implications of the right hand side of Fig 2. Only those scenarios that survived the checks of relevance and materiality are included.

5.1 Roll out delays

Scenario 1, attached as Appendix 3, addresses the impact of further delays to Horizon. The two specific timescales reviewed are: Roll out commences Jan 99, completion Jan 01; Roll out commences Jan 99 but reduced beat rate to 100 per week delays completion to late 2002/ Jan 2003.

The key implications are that the individual business cases change and POCL continues to experience erosion of market share.

- POCL business case NPV improves with delay due to delayed Pathway charges.

- BA business case is materially worsened but remains extremely positive. However, it is understood that BA now argue that they can only take into their case 20% of fraud savings. This would make their case now marginal but contracts were signed on the basis of original fraud treatment and indeed if BA do not get the benefit in their case there would be a strong argument to suggest an additional case needs to be factored in:- for the Treasury. Arguably for practically zero investment they obtain over £100m pa fraud saving.

- Pathways business case deteriorates markedly with delays as far as we can scope this. If their original assumptions were for a profit margin greater than, say, 30% their case remains healthy.

POCL's erosion of business cannot be ignored as a factor but it has not proven possible to put accurate metrics to this. The key message is again one of pain but not fatality. So, the overall conclusion is that, whilst delay hurts all parties there remains a strong reason to persevere with Horizon.

POL00031231

5.2 Total Failure!!

This is regarded as a low probability but has nevertheless been reviewed both as a failure before roll out and failure during. In the latter case it was felt that the most likely situation might be that roll out has continued for some six months when apparent "teething" problems become show stoppers. Perhaps around 2500 offices would have been installed.

Appendix 4 deals with the former and Appendix 5 the latter.

Key implications are as follows:-

- BA would have reason to press for re- negotiation of Contract A. This is likely to prove very damaging for POCL with almost certain removal of the volume floor limits.

- There is an over riding need for the programme team to carry out a full risk management assessment of both scenarios and to ensure plans are in place to protect POCL's interest as far as possible.

- TIP/ADS/SAPCON etc will need a new data source. This may well require a new and larger form of Cash Account, with all the error prone-ness that implies.

- If SAPADS were unable to continue an urgent replacement for CASM would be needed.

- Dependent on the reasons for failure there would be, inevitably, a detailed legal row over disengagement.

- **POCL's STRATEGIC DRIVERS REMAIN RELEVANT AND WOULD DEMAND THAT A SUITABLE ALTERNATIVE PLATFORM WERE SOURCED AS QUICKLY AS POSSIBLE.**

POL00031231

5.3 Credibility Watershed for Pathway

Appendix 6 addresses the dilemma of whether to establish a cause and point in time at which the decision is taken that Pathway are unable EVER to deliver Horizon. The litmus test was whether an alternative path could be defined that represented a better option than continuing with Pathway and accepting further slippage.

The case for starting to explore alternative suppliers is seductive at first but rapidly loses its appeal. Key considerations included:-

- Difficult to keep BA at arms length in the quest for a new supplier.
- Imperative to protect Contract A and not give BA the excuse to start re-negotiation.
- If process has to be a joint POCL/BA quest then it would be constrained by GATT and subject to considerable delays. A rough scoping of timescales suggests five years to start of roll out may not be unexpected!
- There would be a protracted development period before we could be sure that we have a viable solution.
- An early step in the process would be to place an advert seeking would-be players. This public manifestation of loss of confidence in Pathway would almost certainly start legal actions.
- Notwithstanding the above, some form of "pass/fail" hurdle might galvanize ICL into increasing support for Pathway.
- This is a major PFI scheme and the present Government is very keen on this method of private sector involvement. This demands care on the part of POCL and BA but might also offer an avenue of support from the PFI Dept within Treasury.

POL00031231

The overall conclusion is that a full-blown, pass/fail hurdle carries too many adverse risks. Instead it is felt that a "private" watershed based on Congo 4 functionality (BPS for child benefit, OBCS and CAPS interfaces) being available for live operation by end March 98 would be realistic and appropriate. Failure to meet this milestone would trigger discussions with BA intended to lead to consultation with the PFI Dept of the Treasury to gain any help from them. This might include any possible relaxation of PFI "rules" to allow Pathway more flexibility to involve other players. Still high risk in terms of Contract A.

5.4 The ACT Debate

Appendix 7 deals in considerable detail with this complex scenario. The main task was to update the work done in 92/3 to assess the "Treasury Case" for ACT. Key changes are that POCL now has an automated platform defined and almost ready to run. Last time this option could only speculate based on an extension of the APT platform. POCL also now has Contract A which protects income substantially against rapid falls in volume. However the assumption has to be made that whatever drove BA to gain Government agreement to compulsory ACT would also give them cause to re-negotiate this contract.

The three broad areas explored and highline conclusions are as follows:-

(a) Full Compulsory ACT

- Needs secondary legislation and considerable time to roll out. Using DSS' views from 92/93 earliest start would be April 98 and steady state reached in 2002/3.

- DSS' own estimate is that 30% of beneficiaries would remain with foils either because they cannot get a bank account and/or the Government would find it difficult to mandate private sector banks to provide a suitable account.

POL00031231

- This would still result in a loss of total income to POCL of the order of 16% from reduced BA fees and a further 6% from valued related business.

- The Treasury case looks, prima facie, to be better than in 92/93 at £130m pa at steady state. This is primarily because of the avoidance of Pathway charges of around £127m pa. This is also after allowing for £288m pa subsidy to POCL and SPSOs to try to avoid network closures.

- Without a commitment to subsidy POCL would probably need to close 500 crown offices and a further 4500 SPSOs would "self close" due to the considerable drop in both income and footfall. This closure scenario would lead to a further loss in related business leading to POCL being some £200m pa in deficit AND an unstable network.

- The effect on Girobank would be devastating with nearly three quarters of their corporate deposits no longer needed.

- Virtually all the political and socio economic difficulties scoped in 92/93 remain relevant.

- **Conclusion**

  Whilst this scenario cannot be ignored the net gain to Treasury is relatively modest and the political implications immense. It is as unlikely to proceed this time as it was in 92/93.

(b) Accelerated Voluntary ACT

Always an option for BA this scenario explores the notion of incentives as well as promotion. A judgment has to be taken on the level of penetration BA could achieve beyond the current 1% plus. A realistic estimate, which matches some embryonic work done in 92/93, suggests a rate of 3%.

POL00031231

This sort of pace would yield savings to BA by 2002/3 of less than £20m pa. At this pace of change the assumption is made that Contract A continues, as does Horizon. The main financial burden would fall on Pathway who would lose volume and on SPSOs who would lose remuneration. POCL's income would remain unaffected but of course at contract end in 2005 underlying volumes would be considerably lower.

Whilst the saving for BA would also need to fund incentives etc this option remains attractive to BA with relatively low political profile.

(c) Could the 30% foils rump be removed?

Assuming again that ACT was made compulsory BA would still face a 30% rump of foil beneficiaries which would present a growing problem of potential fraud, admin costs of foil production and distribution together with a likely increase in price from POCL.

It is most unlikely that the Government would wish to legislate to enable them to mandate, say, Banks to run low average value accounts for this customer group. Given the Banks and Building Societies would have already taken on board the balancing 70% of customers they are unlikely to be too keen either.

Government could of course mandate POCL to provide such accounts perhaps by sub-contracting to A&L. However, without a platform that enables each withdrawal to be verified the fraud risk would be unacceptable.

The conclusion is that, aside from cooperating with Horizon, BA would find it very difficult to shed the 30% and even then probably at a considerably higher price than the manual system.

POL00031231

5.5 BA withhold commitment until Horizon rolled out

BA are currently contractually committed to Horizon. Without BA's commitment at the start the case for both POCL and Pathway falls. The development and installation costs would be little different, indeed it could be argued that it is BA's software that is the most complete. For POCL and Pathway to continue to develop AP, EPOSS etc and trust that eventually BES would work satisfactorily would be speculative in the extreme.

Even a "commitment to commit" at some future date would mean that Pathway cannot recover any BA volume related charges until perhaps 2001/2. This would still render their business case weak.

This scenario might well be put forward by BA as a negotiating ploy but it has no place in a partnership based multi-million pound scheme.

5.6 BA choose to renegotiate Contract A

Put simply, they cannot unless POCL agrees and/or defaults on its commitments. This is why it will be essential to ensure that any changes to Horizon that POCL elects to make are either neutral to the currently agreed timescales or agreed with BA outside of Contract A.

5.7 Partial Network and Partial Functionality

Appendix 8 explores these two scenarios, the purpose of which is to identify any opportunities for simplifying the program and/or reducing costs. Key conclusions are as follows:

- To lock in BA an electronic payment method is needed. Thus BES functionality is necessary and OBCS would simply prolong an out of date and expensive paper based foil system.

POL00031231

- It would remain problematic for BA to run two systems in parallel long term. Thus the BES payment card has to be universal which means BES functionality is needed throughout the network.

  There is a possible exception to this. Very small offices, perhaps 4000 in all, might be able to authorise benefits payments by phone and thus use the customer's BA card without a Horizon kit. For other transactions POCL would need to ensure that a suitable paper based method were available. Cash Account and management information data would be achieved by "buddying" these offices on neighbouring larger ones. This option still needs detailed scoping to ensure the costs do not outweigh the savings.

- Section 3 above details POCL's key strategic drivers which, in turn, lead to the conclusion that full functionality is needed in order to ensure that POCL can achieve its ambitions and that Pathway's volume assumptions are realised.

- The option for POCL to operate EPOSS and AP in partial network reduces POCL's market attractiveness and results in multiple data systems. This is not insurmountable but would add to rather than reduce the complexity of the overall solution.

- **Conclusion**

  Horizon, or something very similar, is needed with full functionality throughout the network. The exception may just be the smallest 4000 or so offices but this is not yet fully scoped.

POL00031231

6 CONCLUSIONS

A synopsis of the over-riding conclusions is given in the Management Summary at Section 2 above. In this section a wider set of conclusions is discussed to illustrate the bigger picture.

6.1 Horizon and its strategic importance to POCL

(a) POCL needs the Horizon platform (or something very similar) primarily to lock in BA until 2005. This will protect income at a relatively high and predictable level even if volume drops significantly.

(b) POCL also needs to provide a potentially universal access to automated bill payment in the face of fierce competition. The assumption has to be that clients will be prepared to pay a premium above perceived market prices that will at least cover POCL's long run marginal costs.

(c) POCL's accounting systems are thought by some senior managers to be not fit for purpose. Non-automated solutions could be found but would require a restructured (larger) cash account and would still be dependent on manual entry at every outlet. The EPOSS functionality so far designed into Horizon is not quite retail industry best practice and bases itself on ECCO Plus. However it does represent a significant advance for POCL and would enable the financial benefits built into business cases for TIP/TMS, SAPADS, SAPCON to be achieved.

(d) Whilst financial benefits for non-BA functionality have not yet been fully scoped there is a need to recognise that part of this cost at least should be seen as infrastructure investment to give POCL the wherewithal to pursue its Commercial Strategy.

POL00031231

(e) Above all perhaps POCL needs to recognise that Horizon, for all its strategic importance, will fundamentally just buy time. BA business is in inexorable decline and even with Horizon the urge for BA to accelerate ACT uptake will remain. Once Contract A comes to an end in 2005 POCL will face a very significantly different financial as well as footfall scenario. **POCL has until then at the latest to review its Vision, Strategies and Structure to enable it to thrive with greatly reduced dependency on Government business.**

6.2 Effect on POCL's P&L Account

(a) In the early years of the programme continued delays not only improve the NPV in the business case but also ease slightly the profit gap problem. However, once volume starts to flow through the platform, pathway charges start to take effect and there is a £65 to £80m pa impact which is currently not covered by direct financial benefits.

Since affordability of Horizon is a major issue for POCL it is vital that the wherewithal is identified quickly to support the programme.

There is an urgent need to revisit business cases for the back end systems and AP and EPOSS functionalities to establish a more rigorous identification of savings and/or income streams. Ownership also needs to be clarified both for the "projects" themselves and for the commitment to benefit achievement.

There needs to be a clean set of plans for how savings/benefits supporting the £65-80m will be delivered and by whom.

Notwithstanding the above there remains a need to recognise that some of this expenditure is the "entry price" for competing more effectively in the High Street. The task is as much one of finding ways to afford Horizon as it is of identifying direct financial benefits.

POL00031231

6.3 Outcomes of Options Explored

(a) PA Review

The key messages from PA's report are that:

- Significant improvements are needed to the way in which the programme is managed, in particular recognising three partners have different fundamental agenda.

- Options should be examined to identify any descoping opportunities to simplify the platform and reduce costs.

- There is nothing in the report however to suggest that Horizon is fatally flawed and indeed an early draft expressed the view that there appeared no easy exit route for any of the three partners.

- A logical conclusion would therefore be that, subject to any realistic changes that prove mutually beneficial, the task is now to re-affirm joint commitment and move ahead to deliver the platform.

(b) Delays to Roll Out

Even delays to 2002/3, whilst painful to all parties, do not diminish the strategic need for this platform. It will still be better to have the platform late than not at all. For POCL the key tasks would seem to be:

- Sustain Contract A, giving BA no opportunity to re-open negotiations.

- Establish clearly with clients the "window of opportunity" to discuss the automation of their products outside of the Year 2000 period of pre-occupation.

- Identify more robust business benefits for AP, EPOSS and back end systems together with "owners".

- Establish the level of duplication between EPOSS and TMS/TIP and determine if any redesign is feasible without detriment to Horizon costs and timescales.

POL00031231

(c) Horizon Failure

Whether established prior to or during roll out Horizon failure is one of the most serious eventualities of this programme. POCL's strategic drivers remain and therefore some form of Horizon equivalent will be needed rapidly. It is arguable that BA will also need this unless Government is prepared to mandate ACT. Even then, the "rump" of foil beneficiaries will either need a secure payment alternative (Horizon equivalent) or be subject to POCL up-pricing (market pricing argument). An alternative will therefore need to be sourced either with BA as partners or independently. It is arguable that by retaining BA as partners POCL might be better able to sustain Contract A.

Robust risk assessment is needed by POCL together with contingency plans for these scenarios. This will need to include what is done with the 2500 or so offices that would have had Horizon installed before failure.

(d) Credibility Watershed

The notion of defining a circumstance and timescale to determine whether Pathway may NEVER be able to deliver Horizon is not straightforward. To be truly a "watershed" there would have to be full commitment to starting to source alternative suppliers. This would, contractually, need to involve BA and thus the whole GATT process. It would almost certainly lead to complex legal argument with Pathway, particularly if an advert were placed (as it must) to attract interested parties. There would also be a time lag of up to three years before we could have confidence in any new solution and up to five years to the start of roll out.

The difference in end to end timescale to that of actual failure might be at most some 15 months. The diversion of management effort across all parties in the interim make this increasingly less attractive.

However there appears a residual benefit in setting an "internal" watershed for Horizon, beyond which POCL and BA might seek assistance from the PFI Dept of Treasury as to how Pathway could be helped to overcome their difficulties, eg any relaxation of PFI modus operandi. The logical systems criterion could be the availability of Congo 4 (BPS for child benefit, OBCS and CAPs interfaces) for live trial by end March 98.

POL00031231

(e) BA's Perceived and Realistic Options

The key options scoped are as follows:

- BA could not unilaterally pull out of the Horizon contract framework. They need POCL's agreement where, unusually for commercial contracts, POCL is not constrained by a "reasonableness" clause.

  There is nevertheless an issue for POCL in terms of the congruence of Contract A with any agreed further extensions to the Pathway contract 1 to 3. POCL could find itself exposed by commitment to pay Pathway beyond mid 2005 without a back to back mechanism to re-charge BA. In addition any notion of leaving POCL beyond 2005 without the sort of volume floor in Contract A could give significant financial exposure. POCL needs to achieve an extension to the core of Contract A to match any revised Pathway contracts but without re-opening negotiations as such!

- BA could (indeed already have in essence) seek to re-open Contract A in order to ease the pressure on PES budgets. Provided POCL is not in default either on mainstream contract issues or on Horizon there appears no legal basis for BA to succeed. However a strong negotiating stance needs to be maintained.

- Compulsory ACT. Undoubtedly this scenario would result in Horizon as currently defined falling and Contract A being re-negotiated. This is dealt with in detail in Appendix 7 and is a complex issue. However, the main conclusions are that with a projected net benefit to Treasury of around £130m pa after paying POCL and SPSOs an annual subsidy of around £288m the financial case is marginal. Add to this the very considerable political implications of mandating voters to have to use their bank accounts to access benefits and the concept is no more likely to be accepted by Government now than it was in 92/93. However it will remain, no doubt, a negotiating ploy on the part of BA.

POL00031231

- Accelerating voluntary ACT through promotion and incentives is a much less politically sensitive approach. The best assumption the Team has been able to make is that this could achieve a penetration of around 3% pa compared to just over 1% now. This is likely to yield annual savings to BA of around £20m pa by 2002/3 out of which they would have to pay for incentives etc. There would be no specific requirement for POCL to agree to re-negotiate Contract A so its income would remain intact. Pathway would lose income through volume fall as would SPSOs should POCL choose to recover via remuneration. The concept is not hugely financially attractive to BA but might be worth pursuing in order to achieve a lower volume level by the end of Contract A in 2005.

- Returning to the option of compulsory ACT, there remains the challenge of the 30% "rump" of foil volume. It has not been possible to identify a realistic option for BA to overcome this other than by cooperating with POCL in a Horizon-like platform. Even then the pricing arrangements would be fundamentally different.

(f) Partial Network

Section 4 above drives the conclusion that Horizon (or something very similar) is necessary across the whole network. Primarily this is to lock in BA by enabling them to eliminate foils. This remains the over-riding conclusion but the scoping work done suggest there may be mutual benefit in not automating the smallest 4000 or so offices. These account for around 1% of total POCL business yet by their very size and location represent a significant installation cost.

The sine qua non has to be that all BA beneficiaries are able to use their plastic payment cards. The option is that these small offices could obtain authorisation to pay by telephone for each customer. Volumes of customers are such that this would probably not be perceived as a major service deterioration (PO Board non-negotiables). Other work would need to be achievable on a manual basis but the cash account would be "buddied" on to a neighbouring automated office. It is an option that needs further detailed scoping before it can be considered realistic.

POL00031231

(g) Partial Functionality

The PA report recommends that descoping options are considered. Partial network was covered in (f) above. Partial functionality is explored in some detail in Appendix 8. The key conclusions are:

- BES only would lock in BA in theory but the significantly reduced volumes would make the Pathway case unsustainable and POCL's strategic drivers would not be met.

- OBCS only would leave BA with foils and would therefore fail to lock them in as well as denying POCL's other requirements. Volume remains a crucial factor for Pathway.

- BES and AP alone would still fail to give POCL the ability to replace the manual cash account and the opportunity to explore wider revenue streams. Volume remains a crucial factor for Pathway who would need to reconsider pricing.

- BES and EPOSS would leave POCL with the need for a multiple platform in order to stay in the bill payment market. Volume might still be a critical factor for Pathway. Wider revenue streams would also be foregone.

- BES, AP, EPOSS but without further flexibility to integrate to clients' systems would, perversely, meet most of the partners' requirements. But it would still prevent POCL from securing wider revenue streams and should be resisted, particularly given the overall conclusion that POCL needs to redefine itself in a less Government sector dependent future.

The conclusion must be that full functionality is needed across the network.

POL00031231

(h) Platform Segmentation

Whilst the conclusions on network and function remain, it may be feasible to consider different types of **hardware** particularly at the smaller end of the network. This requires further scoping but should also be subject to the criterion that POCL must not be seen as the partner that causes further delay to Horizon or to its costs.

6.4 Next Steps

The following flow directly from the conclusions above.

(a) PA facilitated workshops to achieve re-alignment and commitment to Horizon. POCL will need to resist any attempts to use these workshops as a backdoor means to re-open Contract A.

(b) Alignment of Contract A timescales to match any extension to Pathway contracts needs to be achieved without detriment to the volume floor mechanism.

(c) Business cases for AP, EPOSS, TIP/TMS, SAPADS, SAPCON and confirmation of their operational "owners" need to be reviewed with the requirement that financial benefits need to be realistically identified and plans put in place to deliver.

(d) Overlap between EPOSS and TMS/TIP needs to be quantified and a view taken urgently as to whether there is scope for simplification and cost reduction. This cannot however be seen to be the cause of Horizon delay.

(e) The apparent option to leave the smallest 4000 outlets un-automated needs to be scoped in detail to test its viability.

(f) **ABOVE ALL, POCL NEEDS TO SET IN TRAIN A FUNDAMENTAL REVIEW OF ITS VISION, STRATEGIES AND STRUCTURE TO TAKE ADVANTAGE OF THE WINDOW PROVIDED BY HORIZON. AFTER 2005 POCL CANNOT ASSUME ITS CURRENT HIGH DEPENDENCE BOTH IN INCOME AND FOOTFALL FROM GOVERNMENT BUSINESS.**

POL00031231

LIST OF APPENDICES

1) Terms of Reference

2) PA Report

3) Scenario 1 - Horizon Delays

4) Horizon Fails - Prior to Roll Out

5) Horizon Fails - During Roll Out

6) Credibility Watershed for Pathway

7) ACT Debate

- Compulsory ACT
- Accelerated Voluntary ACT
- Eliminating the 30% "Rump"

8) Partial Coverage

- Partial Network
- Partial Functionality

9) Description of Agreements and Contracts

POL00031231

TERMS OF REFERENCE

CONTINGENCY PLANNING FOR "BA PULLING OUT OF HORIZON" SCENARIO

1. Background: Horizon

- Horizon is a jointly sponsored programme, through a PFI service contracts supplier by ICL Pathway (ICL), by Benefits Agency (BA) and POCL to automate the end-to-end method of paying benefits at post offices, and transfer the associated payment fraud risk out of the public sector as far as possible.

- For BA this programme:

  - saves method-of-payment fraud (est £150m)
  - gives potential administration savings by ridding the process of paper
  - links up to their integrated system for customer accounting and payment (CAPs)

- For POCL this:

  - helps lock in through a new 8 year contract (Contract A) its biggest client (BA) against a threat to promote/compel other channels
  - aims to automate all products and services at all post offices
  - provides the new front-end automated capability to join up with a new portfolio of systems around its core operating process, and critical infrastructure processes (separately contracted)

- For ICL this:

  - gives the opportunity for new revenue streams
  - gives a high profile supply for the UK Government
  - is a flagship project, monitored at Fujitsu level that could contribute to wider strategic options for ICL in the stock market

POL00031231

2. Status

- Contracts were let to ICL in May 1996. Original national roll out to post offices, with automated benefit capability and electronic accounting at point-of-sale, should have started in July 1997
- For a series of technical reasons, the programme has been delayed by approximately 12 months. All parties' business cases have been badly damaged
- Political confidence is low with DS, and serious questions are being asked about continued commitment by their Ministers. POCL and ICL's commitment remains high, notwithstanding the difficulties. POCL believe this is central to our strategy, and our business plan is built around this
- BA have sought further commercial redress and help from both ICL and POCL recently, notwithstanding the contracts already in place
- A jointly-sponsored independent review to all three parties is underway, through PA, and will conclude by 24 September 1997
- BA expect to have to go back to DSS Ministers by mid-September to confirm commitment/abort/change scope
- PO Chief Executive and POCL CEC are alerted to the situation on a confidential basis

3. The Task

- Contingency planning is now needed to consider what needs to be done under the scenario of BA indicating their desire to pull out/withdrawing suddenly from Horizon. This should include scenarios of:

    - BA totally withdrawing from the project
    - BA cancelling card payment services (BES), but retaining the bar-coded order book service (OBCS)
    - BA insisting on post office infrastructure being rolled out prior to committing to automated services being introduced onto it

POL00031231

4. The Scope

a) Overall

- An overall approach would be to consider:
  - what did we originally set out to do (see 1 above)?
  - where are we now (taking into account various reviews done and stakeholders' views)?
  - what is the best way ahead for us to aim at proactively?

b) Immediate

- However, in parallel and urgently, we need to plan our reaction to the scenarios (see 3 above) to include:
  - a plan for the legal and commercial tactics we could adopt having reviewed the various relevant contracts (what would be the legal timetable, and what barriers could we adopt?)
  - a plan for lobbying and influencing all relevant stakeholders
  - a plan for internal and external communication
  - a plan to know what immediate/short term decisions we would have to make around:
    a) the remainder of our Automation Programme (continue/delay/change scope for each big project)
    b) the immediate market-place needs for other post office automation given APT and EPOSS functionality would no longer exist
    c) any immediate extra investment needed for existing systems that will need to be in place longer
    d) any changes to key operational processes needed (e.g. cash account plans)
    e) check-step to confirm there are no extra Year 2000 issues

- We would also need to consider:
  - what would our 5 year business plan look like (high level) if we simply accepted BA pulling out and did nothing to replace all/any of Horizon (but carried on with the rest of automation)?
  - what would our 5 year business plan look like if we implemented the short-term responses referred to above?

POL00031231

c) A little bit later...

- And most importantly, what would the shape of another business plan look like to reflect what's the best way forward to us longer term in this scenario? This would need to relate to the work-in-progress on revised business vision, and refreshed commercial and IS strategies
- This scenario planning could be valuable even if BA do not pull out and could then be split as:
  - without disturbing BA's "Contract A" with us (desired)
  - considering changing parts of "Contract A" if essential (not desired)

d) How to implement this

- There are various ways in which how the immediate/longer term plans could be deployed to consider too, including:
  - involving ICL some way
  - buying out the kit/subcontracting supply
  - re-sequencing the automation programme and,
  - approaching BA with a new commercial deal/a different service offer

5. Timetable and deliverables

- Bullet point plans to cover "immediate issues" (4b above) are needed by, say, mid-September, for CEC endorsement
- Bullet point options for the remainder (4c and 4d above) is needed by, say, end-October as a first stage with a review of which options to pursue thereafter as part of the business planning cycles
- Some quantification of scenarios, at business plan levels, will be needed on options
- Consultancy assignment disciplines needed to run this in the time needed

POL00031231

6. Resources needed

- CEC level sponsorship (Steering Group set up?)
- High level consultancy-type skills to lead this 'project' (full time) with a small core "virtual team" drain from POCL people
- POCL skills needed:
  - BA/ICL contract/legal knowledge (core)
  - market planning (core)
  - automation programme knowledge (core)
  - business planning (part time)
  - IS knowledge (part time)
  - risk management check-steps (part time)
- Virtual team rules apply in the short-term (first call on time etc)
- Consultancy budget needed (none planned - overspend needed to be approved at CEC level)

7. Next Steps

During week commencing 18 August 1997:

- Endorse/amend these Terms of Reference
- Agree timetable
- Appoint team and team leader (consultant if necessary)
- Agree budget

Paul Rich
15 August 1997

POL00031231

Appendix 2

PA REPORT

THIS REPORT IS ON A RESTRICTED CIRCULATION AT THE TIME OF WRITING, SO IS TEMPORARILY OMITTED FROM THE APPENDICES

POL00031231

Appendix 3

Impact of Delayed Horizon Roll Out

1(a) Likely Outcome

Horizon roll out commences January 1999 with an average 200 per week beat rate resulting in completion end 2000/2001. All releases assumed fit for purpose as per current planning framework.

(b) Potential Outcome

Horizon roll out commences Jan 1999 but bear rate averages 100 per week so completion is delayed to end 2002/Jan 2003. Again all releases assumed to be fit for purpose and to time

(c) Both of these are scoped in terms of impact on, Business case, POCL Business Plan, Legal/contractual issues, back end systems, action needed by POCL and overall input on POCL Commercial Strategy.

2. Impact on Market Dynamics

(a) Any delay to Horizon is painful as it allows relatively uncontrolled erosion of business. It also means clients will be preoccupied with Y2000 issues and will be reticent about investing resource in their own system architecture until post Y2000 resolution.

However, discussions with Commercial Business Centres indicates there are no show stoppers for POCL as such. Horizon platform within even the longer roll out programme is still regarded as essential to support POCL's ability to retain and gain profitable business.

POL00031231

(b) The bill payment market is an exception in terms of the urgency to have a wide reaching flexible facility in the network. Current delays are already proving painful and will leave competitors such as PayPoint with comparatively softer target. However, plans are already in place to extend the APT platform in advance of Horizon in order to meet individual new client needs.

(c) The over riding need is to lock in BA with a non foil based payment system. Hence the card payment system remains a key functionality for POCL and continues to be irrespective of delay.

3. **Impact on Back end systems**

(a) **Jan 99 to Jan 2001 Roll out**

There are no back end system show stoppers and there may even be opportunities for modest cost savings by reviewing project implementation timescales. However the usual considerations around standing down project groups for comparatively short periods apply.

(b) **Jan 99 to Jan 2000**

Again no show stoppers but a need to address some important issues.

- Should full TIP be put on hold pending completion of roll out? This might save money but will make it more difficult to develop client integration/take on plans. Certainly it could be difficult to respond to client urgent requests.

  In any event, the TIP solution as defined would be several years old by the date of implementation - would it still be fit for purpose? (Being considered by ATSG)

POL00031231

- Hybrid platform is likely to need at least partial replacement to continue to support existing systems. This may be exacerbated by the likely mushrooming of clients involved in bill payment following deregulation. (Janet Topham is currently exploring this).

- May need to reconsider migration strategy and adopt a policy of migrating to new back end systems before roll out is complete. Hitherto seen as high risk.

- SAP/ADS benefits would be delayed, perhaps critically. Work is underway (by Logistics Business Unit) to evaluate implications of de-coupling from Horizon Roll out.

- Whilst many clients are unlikely to wish to devote resource to integration during their own Y2000 work, this delay provides an extended window for clients take on prior to roll out completion.

- Need to understand better the impact for other legacy systems which will need to continue until roll out ends.

(c) **Conclusion**

Horizon delay does not jeopardise back - end system development but does make it more complex and increases risk of financial benefits delay/reduction.

4. Legal/Commercial Contract Implications

(a) BA/POCL Contract A

This contract is pivotal to POCL's financial position. The volume floor limits protect income to POCL in the event of faster than expected volume decline.

POL00031231

We must resist any pressure to renegotiate this since it would be difficult to sustain the same level of floor limits this time. Renegotiation, other than by mutual agreement, would be triggered, for example, by a collapse of Horizon.

Neither of the roll out scenarios considered here would have a materially detrimental effect on Contract A for POCL because of the floor limits. However, current contract timescales are likely to leave POCL with a continued commitment to Pathway changes potentially well beyond the May 2005 end date of Contract A. i.e. longer than currently agreed 4mth period. For example Roll out A would expose a further 10 months and roll out (b) a further 22 or 32 months.

It is worth noting however that, for BA, delays in roll out will lead to delays in financial benefit realisation whilst remaining committed to paying POCL at the guaranteed minimum.

(b) Contracts 1 to 3

It is not possible for BA to seek unilaterally to terminate any or all of these contracts.

Notwithstanding that any fatal flaw in the Horizon platform would make it difficult to prevent termination, the roll out timescales considered here would not be sufficient to support termination of these contracts.

Nevertheless the complications regarding non uniform extension of contract, as mentioned above, still applies.

POL00031231

(c) Conclusion

Ostensibly there are no show stoppers in the contract framework from now to end of roll out.

However there is exposure to POCL from two eventualities :-

- for whatever reasons (e.g. CAPS delay) contract 1-3 extend significantly beyond the end of Contract A. POCL then pays Pathway for services provided but there would be no back to back arrangement with BA for Pathway charges or POCL mainstream services.

- The final month of Contract A reverts to a unit charge framework with no floor limits. Any attempt by BA to extend this contract on that final month basis will need to be resisted vigorously.

There is every likelihood that Pathway will need to successfully negotiate an extension to their five year contract framework. POCL renegotiation tactics should include a drive to realign contract periods to overcome the anomalies highlighted above.

5. Impact on Business

(a) POCL Business Case

Delays in the start of roll out and/or a lower beat rate increases the NPV due to Pathway charges being delayed

MaPEC April 1996 (Roll out Spring 97 - Spring 99)	NPV £65m
Current Case (August 1996) (Roll out July 98 - July 2000)	£136m
Delayed Scenario (1) (Roll out July 98 - July 2000)	£148m
Delayed Scenario (2) (Roll out Jan 99 - Jan 2003)	£178m

POL00031231

(b) Estimated BA Business Case

	£m Fraud (100% Savings)	£m Admin	£m Pathway Charges	NPV (6%)	NPV (12%)
Original	134	146	(123)	£776m	£587m
Current	134	135	(122)	£543m	£387m
Roll out Jan 99 - Jan 2001	133	54	(122)	£423m	£293m
Roll out Jan 99 - Jan 2003	133	---	---	£392m	£258m

Assuming only 20% of fraud savings are claimed by BA delay dramatically worsens their business case (although the rest of the Fraud savings still accrue to the treasury).

	£m Fraud (20% Savings)	£m Admin	£m Pathway Charges	NPV (6%)	NPV (12%)
Original	27	146	(123)	£153m	£100m
Current	27	135	(122)	£30m	£3m
Roll out Jan 99 - Jan 2001	27	54	(122)	£19m	£31m
Roll out Jan 99 - Jan 2003	27	---	(122)	(£40m)	(£45m)

POL00031231

(c) Estimated Pathway Business Case

Because of the difficulties in modelling the ICL Pathway Business case an estimate of their original expected margin was taken.

Depending on what their original assumption was as to the percentage return of the project the Case B is in a varying state of health (i.e. if 40% margin was taken, then the case still costs in, however if only 20% was taken, the case is now marginal).

	Net Benefit/ cost at 20%	NPV (12%)	Net benefit/cost at 40%	NPV (12%)
Original Case	£270m	£146m	£540m	£308m
Current Case	£126m	£3m	£397m	£165m
Roll out Jan 99 - Jan 2001	£9m	(£78m)	£297m	£84m
Roll out Jan 99 - Jan 2003	(£105m)	(£146m)	£165m	£16m

6. Impact on POCL Business Plan (1997/8 - 2001/02)

(a) Roll out ending Jan 2001

	1997/8	1998/9	1999/ 2000	2000/01	2001/02
Original Business Plan Impact £m	(26)	(70)	(77)	(79)	(77)
Absolute Numbers £m	(8)	(15)	(63)	(86)	(81)
Variance from Business Plan £m)	18	55	14	(7)	(4)

POL00031231

(b) **Roll out ending Jan 2003**

	1997/8	1998/9	1999/ 2000	2000/01	2001/02
Original Business Plan £m	(26)	(70)	(77)	(79)	(77)
Absolute Numbers £m	(7)	(11)	(33)	(65)	(76)
Variance from Business Plan £m	19	59	44	(14)	(1)

7. Impact on POCL Commercial Strategy and other supporting strategies

(a) Crucial to POCL's Commercial Strategy is to safeguard for as long as possible both the footfall and income from the largest client, BA. It also needs the ability to develop opportunities with new and existing clients based on improved (more efficient) operating procedures and better management information.

Horizon (and the BA/POCL Contract A) is an essential element in achieving this ambition.

Either roll out scenario still support the medium term strategic direction for POCL.

(b) Supporting strategies which may well need realigning include

- I.S. Strategy. The present IS strategy appears to date back to a pre - Horizon environment. There is obviously a need to develop an IS strategy that takes account of Horizon as well as the emerging Commercial Strategies and that can set priorities for support systems.

POL00031231

- **HR Strategy**: Strategy should remain intact but short term tactical tasks will need addressing e.g. use of specialist resources during intervening period of delay, recruiting/training suitable numbers of support staff for roll out, sensible exit packages and plans for end roll out, future profile for recruitment candidates.

- **Retail Strategy** : Assuming their is a robust linkage between the emerging Retail Strategy and the Commercial strategy, Horizon might prove a constraint to the outlet formats being considered. A decision will be need on how any totally new retail format can input compatible data to the Horizon - TIP data flows.

8. Internal/External Communication and Stakeholder Lobbying

(a) Internal Communication

This is a much broader issue than just for those scenarios. Nevertheless, there is a need for a positive but realistic message to be communicated soon to the network. This may help to stem the growth of speculation.

Once the way forward is clear then a further definitive statement should be followed by regular, relevant updates.

(b) External Communication

Until we are absolutely clear on the way forward it seems imprudent to communicate externally other than on a very controlled level to clients.

(c) Stakeholder Lobbying

This should be reserved for eventualities that may lead to curtailment of Horizon and in particular Contract A. In the scenarios scoped here there would seem little point in lobbying Government at this stage

POL00031231

Appendix 5

SCENARIO 9

HORIZON FALLS

Development work stops - contract termination initiated November 1997 - project closed down May 1998. All parties acknowledge Horizon is dead

OPTIONS

- **(a):** Termination acknowledged in November 1997
- **(b):** Termination acknowledge in April 1998:
  - Pathway development continues
  - BA negotiations fail eventually
- **(c):** Live trial - fatal flaw:
  - Decision to termination October 1998, close down March 1999

FRONT-END

- Nothing in place or planned

BACK-END

- No automated feed into TIP/ADS/SAPCON. TIP to continue needs modified cash account/manual feeds ADS reduced benefits - CASM replacement Whole Office View not possible

POL00031231

SCENARIO 9

EXISTING SYSTEMS

- Continue and need to be supported and maintained including hybrid platform
- Market forces demand APT extension 6000 → 10000 Y2000 as currently need to support larger volumes (is this sustainable customer service?)

CLIENT TAKE-ON

- DNS, Girobank, (bill payment)
  - limited expansion
- RM continue to seek alternative channels
- BA:
  - worst case Compulsory ACT → £250m? pa revenue loss 2002/3
  - best case renegotiation Contract A
  - ACT encouragement → £50m pa
  - Knock-on impacts e.g. on corporate deposits

LESS SIGNIFICANT

- DVLA - at risk medium term
- BBC - essentially bill payment
- Parcelforce - F.A.
- Passports - some network will do
- Bureau de Change?

POL00031231

SCENARIO 9

NEW BUSINESS

- Insurance
- On-line ticketing
- EFTPOS

RESOURCING AND MANAGEMENT - COST REDUCTIONS

- Close down PDA
- Stand down regional support structures
- Curtail TIP & SAPCON
- SAPADS??
- Curtain development function

OFFSET INCREASES

- APT expansion
- TIP etc redesign/cash account modification and replacement
- Support for new logistics function

REPLACEMENT SUPPORT FOR IS STRATEGY E.G. FUTURE AUTOMATION PLATFORM)

POL00031231

SCENARIO 9

FUNDING - IMPACT ON POCL

- Close down costs with Pathway (including legal fees)
- Closing down PDA - redundancy etc
- Standing down Regional Support (EVR knock-on)
- Beneficial impact on profit? Short term?
- Medium/long term hit on profit
- Fund of increase (revenue/capital):
    - logistics (CASM v. Stock v. Tr. Stock)
    - TIP/cash account
    - IS Strategy

FUNDING - IMPACT ON BA

- Savings in PDA/Pathway cost
- Reduced administration savings (keep foil)
- Reduce fraud savings
- Cost of achieving alternatives
- ACT debate
- Opportunity to radically revamp (short term) benefits structure (Frank Field)
- Cost savings from renegotiated Contract A £50-120m?
- CAPS costs exposed

FUNDING - IMPACT ON PATHWAY

- Raison d'être disappears
- Exit costs (blow-back to BA/POCL?)
- Negative brand impact
- Longer term impact on ICL? (What will Fujitsu do?)

POL00031231

SCENARIO 9

BOX E: ASSUMPTIONS

- POCL wish to retain bill payment market position
- Continuing with back-end system replacements
- We don't lose existing clients in short/medium term

BOX F: IMPLICATIONS

- Impact on cash market programme and secure stock rationalisation
- POCL could restructure sooner. (a) overhead; (b) network e.g. 5-8,000 outlets
- Cost implications
- Can we afford/do we need back-end system changes
- How long will existing clients sustain a non-automated platform? E.g. When do they proactively plan disengagement?
- When does POCL face managed and unmanaged decline?
- No debit card facility

POL00031231

Appendix 6

HORIZON FAILURE SIX MONTHS INTO ROLL-OUT

Introduction

Horizon commences roll out with all technical issues ostensibly resolved. As roll-out progresses a growing awareness builds of potentially serious failures. These might be purely technical or a combination of scale of operation and software limitations.

This scenario assumes that at the six month point a decision has to be made that further installations cannot proceed because the level and scale of failure is too serious.

This paper scopes at high level the main implications and suggests preparatory work that would appear necessary in order to mitigate some of those implications.

What would the network look like at six months after roll out starts?

Leaving aside London offices, the need to focus on critical mass, inter alia, will mean that some of our larger offices will be part of the first six months batch.

The likelihood is that roll out rates (beat rates) would build over the first few months and, given there might well be failures signalled on route, it is a reasonable assumption that an average rate of 100 per week would apply. In other words probably some 2500 offices will have been completed with full functionality.

By inference part or all of that functionality could by then be exhibiting serious enough problems to cause unacceptable service failures.

POL00031231

Impact on Customers

BA card customers in particular would probably number some 1.2m by this stage. Given the roll out parameters, i.e. by BA Local office areas there would be no alternative method for customers to access their benefit particularly in busy offices such as these.

Impact on other customers would depend on the level of penetration of product development with clients; affect of longer serving time through revision to manual working and potentially higher error rates.

Impact on Clients

All clients' customers are likely to be adversely affected if only through serving times. The level of commitment by individual clients, to, say, vertical integration could render their operation at least temporarily unworkable. Of course there would be loss of confidence throughout.

Impact on POCL

Front end operation becomes at best totally disjointed. Even when a contingency solution is imposed it is likely to extend transaction times etc. The failure of BES would be potentially damaging and exposure to e.g. fraud would need to be quickly resolved.

Generally we would see an erosion of our customer base on many core transactions e.g. Bill payment but also because ACT starts to look more customer friendly!

An automation platform remains crucial to POCL's commercial strategy and therefore we would face the dilemma of whether to resolve the problem or rapidly pursue an alternative.

Despite any protection that Contracts I and II may provide there is likely to be significant exposure financially for POCL.

POL00031231

Impact on BA

A major component of their strategic programme has failed. They have over 1million customers with ostensibly a worthless card and even by replacing temporarily with girocheques, this could take a month to implement.

Impact on Pathway

Any financial exposure to BA would be passed across to Pathway and would cause financial collapse. Most of their financial investment would have been committed.

Conclusions and Recommendations

As with any "disaster scenario" the implications are enormous for all players but particularly the supplier, Pathway.

The true added value of this kind of scoping is to highlight the need for risk assessment and contingency planning. The following are therefore the key recommendations:-

- A full risk management exercise for this scenario needs to be completed and robust contingency planning conducted with appropriate ownership assigned within POCL. It should be included in the Business Risk Register.

- A management process needs to be in place that can take "early warning" signals from service monitoring and ensure that appropriate action is commissioned including the point at which failure rates lend to suspension. This is particularly important if the service management elements of the programme are not yet running at full speed.

- Because the BES functionality is so critical and there is no ready full back in large scale terms, there needs to be particular contingency development in this area.

POL00031231

Appendix 7

CREDIBILITY WATERSHED

Introduction

This eventuality is being evaluated in order to try to have a safeguard for POCL should we find at any time that Pathway face a fatal show stopper which forces an end to Horizon.

The two key areas of potential failure are (a) a major technological breakdown and (b) operational inability to deliver successful roll-out..

The litmus test is whether we can identify an alternative path that represents a better result than continuing to accept slippage on the present programme.

What would make us feel that Pathway cannot ever deliver?

Despite the current opportunity for Pathway to re-plan their operating milestones and with the benefit of PA's recommendations:

a) A critical software release fails to achieve live trial operation in a reasonable pre-determined timescale and/or

b) Absence of a comprehensive roll-out programme including details of resource requirements and sourcing plans that appear robust, auditable and credible

Practical Decision Criteria

The two key software releases that give evidence of Pathway's ability to deliver are:

Congo 4: BPS for Child Benefit; OBCS and interfaces with CAPS. Currently scheduled for delivery into live operation by 3 November 1997

NILE2: APS; EPOSS; OBCS; Enhanced BPS. Currently planned for live operation in June 1998. This release is subject to Pathway re-planning in October 1997

POL00031231

There would be logic in adopting Congo 4 as the litmus test given its significantly earlier expected release and its criticality to BA as well as POCL

Implications of seeking an alternative supplier

a) It would be very difficult to keep BA at arms length in any quest for a new supplier

b) It is imperative that we protect Contract A and not provide BA the opportunity to seek re-negotiation

c) The process therefore would need to be a joint POCL/BA exercise and therefore would be constrained by GATT and related procurement rules. There would also be lengthy dialogue within BA and ostensibly between Ministers

d) If this process were initiated in January 1998 a preliminary scoping suggests that initial milestones might be in:

January 1998	-	process commences with preliminary discussions with BA
September 1999	-	BA/POCL ready to place advertisement in appropriate journals to solicit interests from potential suppliers
January 2001	-	Sign contract with new supplier
January 2003	-	Roll-out starts
January 2005	-	Earliest roll-out completion

Even if these timescales are inaccurate, the implications are:

POL00031231

- We face at best a protracted development period before we can be confident of having a working platform albeit with a completion date beyond our current worst predictions

- Placing an advert (Sept. 1999) is a public demonstration of loss of faith in Pathway no doubt leading to legal challenges. However, this provides a further reality check against the position then reached by Pathway. Should Pathway have convinced us of their deliverability we could withdraw from the alternative route at minimal cost

Other Considerations

a) This is a PFI scheme and PFI is currently favoured by Government both as a funding mechanism and access to project delivery expertise from private sector

b) Our eventual approach will need to be defensible to Ministers given the wide political ramifications. It will also need to be robust against challenges from Pathway that BA and or POCL have contributed to failure

c) Our latest understanding is that the continuing delays are the result of management processes and approach in Pathway particularly, rather than any inherent technical fatal flaw. The implication is therefore that these should be resolvable provided appropriate measures are put in place

d) The attraction of commencing an alternative path would give BA/POCL some earlier start should, say, Fujitsu close down Pathway. This has such wide-ranging implications (particularly Contract A) that it is not an over-riding reason for pursuing the alternative path

e) It is conceivable that support could be obtained from the PFI department of the Treasury to help identify ways in which Pathway can be aided/encouraged to deliver. This may include a more flexible interpretation of the PFI rules

POL00031231

Options and Recommendation

The three broad options appear:

a) Do nothing and persevere with current programmes

b) Adopt a watershed of Congo 4 available for live operation, say, March 1998. Failure of this would lead to BA/POCL opening discussions with PFI Department of Treasury to identify if they can be of help regarding Pathway's deliverability

c) Adopting, again, the Congo 4 trigger but leading to BA/POCL commencing discussions to plan for exploration of an alternative supplier

Option (b) would provide both a low risk of external market exposure yet may identify some helpful re-alignment within Pathway

POL00031231

Appendix 8

The ACT Threat

1. Introduction

This report addresses the potential impact that compulsory ACT might have on POCL and its operation. It builds on the analysis carried out in 1992/93 when a serious attempt was made by the DSS to move towards compulsory ACT.

As with the arguments in 1992/93, slow compulsory ACT (ie only all new beneficiaries) is regarded in Treasury terms as leading to a similar "steady state" result as full compulsion, albeit taking 16 years to reach. It is not therefore scoped in depth in this report.

However, a scenario of accelerated voluntary ACT, achieved through vigorous promotion and incentivisation, is scoped as this would appear a tempting, relatively low risk proposition for BA.

2. Summary and Conclusion

2.1 In 1992/93 a potential net benefit to the Treasury of around £70m pa was demonstrated as the likely difference between full compulsory ACT and POCL's proposal to use a basic automation platform enabling BA to use Smart cards for payment.

The considerable political implications of wide network closures, continuing subsidies for POCL/SPSOs and of course the concept of limiting customer choice against a relatively "minimal" net benefit for the Treasury, helped to secure support for continuation of voluntary ACT and an automated platform for POCL.

This time the logical comparison is against Horizon implemented as per the summer 1997 re-plan ie roll out October 1998 and ends summer/autumn 2000.

POL00031231

2.2 The overall "Treasury" case for full compulsory ACT shows a substantially higher net benefit than last time up to £130m pa at steady state. This is primarily due to the Pathway charges being "saved" by BA.

The impact on POCL would be a loss of some 60% of BA transactions representing c 16% loss of total business volume in year 5 (steady state). Added to this would be a loss of some 6% of total business from ancillary transactions lost through reduced footfall.

2.3 Without subsidies to POCL and SPSOs this could be expected to drive "self-determined" closure of some 4,500 medium SPSOs.

POCL would find it difficult to restore viability and would need to consider closure (not franchising) of some 500 Crown Offices.

The effect of both controlled and uncontrolled network closures would be the further loss of some 7% of total business. However, POCL's then operating deficit might be around £199 million pa. But the network has by then become unstable and further network closures, with ensuing loss of business, would be a high probability.

2.4 The main political, social and wider economic impacts remain broadly as in 1992/93:-

- Customers become greatly disadvantaged due to loss of choice and this becomes exacerbated by any network closures. The latter affecting not just BA beneficiaries.

- The Government would be seen to have been active in producing some 17,000 plus job losses - unless committing to very sizeable and ongoing subsidiaries to POCL/SPSOs.

POL00031231

- A serious disruption would result in the UK's ability to re-circulate coin. Either coin mountains would grow and/or the Royal Mint would incur sizeable costs of re-distribution.

- Girobank's viability would be put in question as it would have to withdraw substantially from the Corporate Deposits market.

- There would be substantial and co-ordinated adverse reaction from the NFSP, directed towards Government. CWU might also become active if they perceive that the future of Crown Offices is at risk

- BA would need some form of fraud control on the 30% "rump" of foils business. This might well need to be a form of ESNS across our remaining network - a very costly proposition not scoped in detail here.

2.5 BA could wish to step up significantly their promotion of ACT, even to the point of incentives. It is very difficult to estimate just what rate of "conversion" could be achieved but consensus within the POCL team is that a total rate of 3% per annum drift to ACT is probably the best BA could achieve, even with incentives. (Current rate is between 1 and 2% per annum). Annex III shows some detailed analysis.

The increased rate of penetration would produce a maximum gross benefit to BA of around £20m pa by year 5 (to maintain comparability with the compulsory scenario). That gain to BA would be at the expense of Pathway (reduced charges) and subpostmasters (cost recovery from reduced volume). POCL's direct income would not be affected so long as Contract 'A' (POCL/BA) holds. The loss in related business would be relatively insignificant in this time scale.

POL00031231

2.6 A further consideration detailed in Annex IV is whether, having introduced compulsory ACT to 70% of beneficiaries, BA could find a way of eliminating the remaining foil-based transactions.

Unless the Government were prepared to mandate private institutions and reluctant beneficiaries to operated conventional bank accounts there is no straight-forward solution.

POCL could provide an ACT equivalent service in conjunction with say, Alliance and Leicester, but would need on-line automated network to do this and would no doubt wish to reflect this in charges to BA.

2.7 In conclusion, whilst the Treasury case for compulsory ACT appears stronger than in 1992/93 the maximum net benefit is still relatively nominal when set against the politically challenging implications of such a move. This option therefore appears an unlikely one. The concept of accelerating ACT via promotion/incentives appears to have an appeal for BA but the gross benefit is modest and would require continuous expenditure of similar if not greater magnitude. This does not indicate an option of complacency for POCL. Eventually the continued impact of ACT will cause POCL to need to re-align itself to a significantly changing market place. What this does suggest is that a short term disaster scenario for POCL is unlikely but POCL has a window of opportunity to re-align its commercial and operational strategies.

2.8 Note: This form of scoping exercise is so dependent on judgmental inputs that the specific numbers are less robust/ meaningful than the overall message.

POL00031231

3. Direct Impact of Full Compulsory ACT

Annex I, table 1, shows the current projection of BA business volumes and income, indicating a total POCL/Girobank charge to BA in 2002/3 of £415 million.

Table 2 indicates the projections for BA volumes as the result of full compulsory ACT commencing April 1998. The fall in conventional foil-based BA work represents a 60% decline from the current projection for 2002/3.

Table 3 illustrates the likely price (income) impact for POCL assuming Horizon falls; Contract 'A' is re-negotiated; Green Giro migration from Girobank to POCL continues but volumes fall to some 50% of current projection for 2002/3. The impact is that BA could see a total POCL/Girobank charge of c £252 million in 2002/3 compared to current projection of £415 million.

However, if Horizon falls BA would not incur the estimated "steady state" Pathway charges of around £127m.

3.1 POCL Impact

The direct loss of 60% of BA volume by 2002/3 reduces income to POCL/Girobank of an estimated £163 million pa (equivalent to approximately 16% loss of total business). Of this, the likely recoverable cost from subpostmasters' pay is:-

£163m x 0.78 (% share of volume) x 0.6 (recoverable costs)

= £76m pa

POL00031231

3.2 Impact on BA

Annex II (Table 4) illustrates the direct costs/savings dynamics for BA.

Under the current programme and contract, BA would expect to make a running year saving by 2002/3 of £250m pa comprising of fraud saving and £100m of admin saving. £150m

By moving to compulsory ACT, BA would make a running year saving in 2002/3 of £475m pa comprising £163m from POCL/Giro charges; £105m from fraud; £80m from admin and from Pathway charges. £127m

3.3 Impact on Subpostmasters

Two principal effects. POCL would expect to recover cost savings from subpostmasters' pay for the direct business lost. This would be of the order of £76m pa.

There would then be an issue of viability for many offices unless a direct subsidy were made of a similar order.

Irrespective of subsidy the reduced footfall would impact on private side business. This is difficult to scope but is dealt with later in the report. It is worth noting that in 92/93 the Treasury view was that only that element of profit loss on private business should be considered in any calculation.

4. Indirect Impact of Full Compulsory ACT

4.1 The effect of reducing BA transactions by 60%, in addition to the impact described in 3 above, would be to reduce footfall throughout the network. If we assume an average of 1.5 BA transactions per visit this equates to a drop in customer visits of around 20%. This will, in turn, impact on customers' decisions to use post offices for related transactions.

POL00031231

Using the latest Commercial Proposals (draft) estimates of relevant product income for 2002/3 and an estimated reduction due to footfall loss:-

	Income £m 02/03	Est loss due to foot-fall reduction %	£m
Financial Inpayments	186	-10	18
Savings	54	-5	2
Corporate Banking	162	-30	55
Mails	270	-2	5
Lottery	55	-10	5
	£727m		£85m = 12% loss

NB: Total income forecast for 2002/3 is £1414m so this product range represents approximately 50% of total. Thus the indirect loss of business is approximately 6% of total business.

4.2 However, the impact does not stop there. All SPSOs except the very smallest outlets will face an income reduction of the order of 22% (16% direct and 6% indirect) together with a corresponding reduction in private retail earnings. Given the delicate balance that already exists for many such outlets it is almost certain that a significant number will close because of, or just ahead of, financial non-viability. We have estimated this to be of the order of 4,500 (unless a direct subsidy were payable).

4.3 Furthermore, POCL would wish to address its cost base radically and we have taken the view that POCL would elect to close (not convert) some 500 of the remaining 600 or so Crown Offices.

POL00031231

Assumptions on network segmentation costs:-

Type of Outlet	% of total volume %	Average Cost/BTH £	Typical no of outlets
Crown	22.5	45.4	600
FPOs	4.4	32.7	) 900
MSPOs	9.2	29.2	)
SPSOs (Large)	32	30	3000
SPSOs (Med)	28.4	42	8000
SPSOs (Small)	3.5	68	7000

4.4 Assumptions on Network dynamics following compulsory ACT:-

1. 500 Crowns handle approximately 20% of total business. After closure some of this business is lost; the remainder migrates to SPSOs and MSPOs approximately 75% and 25% respectively.

2. 4500 Medium SPSOs would close due to loss of income (we would expect small outlets to be "protected" by remuneration mechanism and outlets near to closing Crowns to benefit from migrated business). Again some business would be lost and the rest migrate to other offices.

POL00031231

4.5 Secondary impact assumptions on business volume (due to closures)

	2002/3 income forecast after ACT effect £m	2002/3 further erosion due to office closures	
		%	£m
Financial Inpayments	168	-30	50
Savings	52	-20	11
Corporate Banking	107	-10	11
Mails	265	-10	26
Lottery	50	-10	5
	£642m		£103m = 16% loss

NB: Based on total income forecast of £1414m this represents a further 7.3% erosion of total business.

4.6 Total Impact on POCL Forecast Volume

Current assumption (Sept 1997) for volume in 2002/3 = 24.5m BTH

Thus: Volume loss due to ACT directly (16%)	= 3.92m BTH
Volume loss due to related transactions (6%)	= 1.47m BTH
Volume loss due to closures (7.3%)	= 1.79m BTH
Total Volume Loss	= 7.18m BTH
Residual Volume	17.22m BTH

POL00031231

4.7 Other considerations on POCL income

POCL would face a rapidly declining network but one whose size and location would, be out of control. This would impact adversely on POCL's ability to attract new clients until we could show an acceptable level of network robustness.

However, two key areas of financial income can be scoped, albeit loosely.

a) Reduction in outpayment for BA of the order implied would reduce POCL's need for cash by about £30bN pa. This in turn would need to be reflected in the Girobank/POCL relationship and, assuming the new partnership rates apply, would mean approximately a £40m loss in gross profit of which POCL might be expected to 'share' £20m pa.

b) Coin would still enter POCL's network through the wide range of inpayment services and some residual corporate deposit business. The fundamental need for such coin (BA benefit are rarely in "round" figures) would have reduced so much as to lead to coin mountains re-appearing in POCL.

   An estimate of interest loss (acceptable to Treasury in the 92/93 calculation) is £20m pa.

5. POCL Cost Recovery

5.1 For the purpose of this calculation, assume 5000 offices (500 Crown : 4500 SPSOs) have closed.

5.2 500 Crown Offices closing would represent approximately 20% of total volume (residual) = 20% of 17.22m BTH = 3.44m BTH.

Assuming this residual business migrates to MSPOs/large SPSOs whose average cost of operation is c £30/BTH:

Cost recovery = 3.44m BTH x (45.4 - 30) = c £52m pa

POL00031231

5.3 4500 SPSO closure: assume business migrates both to larger (therefore cheaper) and smaller (therefore more expensive) outlets in broadly equal proportions. Thus, no saving associated in differential cost of SPSO network.

However, main saving would be from remuneration cost recovery

(a) Direct BA business lost (see 3.1 above) recovery = £76m pa

(b) Indirect related loss of business = 1.47m BTH x 0.78 x 0.6 x £42 per BTH = £29 million pa

(c) Indirect loss of business from closures = 1.79m BTH x 0.78 x 0.6 x £42 per BTH = £35 million pa

6. Other significant relevant costs

6.1 Compensation payable to 4500 SPSOs, if proved that this was directly caused by POCL;

4500 at an average of £33K = £148m one off and spread over five years to 2002/3. NB: This relates to approximately 10,000 job losses.

6.2 EVR costs of closing 500 Crowns (approximately 7,500 job losses) would be £56m as a one-off cost.

6.3 The 30% "rump" of foil-based BA transactions would be heavily fraud prone without a suitable at least ESNS system.

Estimated cost of this is difficult to scope BUT would need to be available throughout the network and could certainly be of the order of £100m.

Running costs would then need to be added to the on-going costs to BA and Treasury including interest and depreciation. Perhaps £25 - 35m pa.

POL00031231

7. Summary of POCL Income and Costs Dynamics

Loss of Income

	£m
POCL income loss at 2002/3 from BA/Green Giro	163
POCL income loss at 2002/3 from related business	85
POCL income loss at 2002/3 from network closure	103
POCL income loss at 2002/3 from Corporate Deposit profit share	20
POCL loss of interest on coin mountain	20
	£391m pa

Cost Recovery

	£m
Cost recovery from SPSOs for BA and related volume loss	105
Migration from 500 closed Crown Offices to SPSOs	52
Cost recovery from SPSOs on business lost through closure	35
	£192 pa

Plus:

(a) One off EVR costs of £56m

(b) Compensation to closed SPSOs, one-off, £148m

(c) SPSO private side "lost profit" subsidy c £4m pa

POL00031231

8. The Treasury Case

8.1 Compulsory ACT with no PO closures: Estimate based on steady state at Year 5.

Savings	**£ million**
Savings to BA from POCL/Giro charges	163 pa
BA admin savings	80 pa
BA fraud savings	105 pa
Savings to BA from ceased Pathway charges (BES; PAS; CMS)	127 pa
Total	475 pa

Costs	
Cost to POCL of direct and indirect business loss (163m + 85m + 40m)	288 pa
NB: This would represent the subsidy required including £105m passed on to sub-postmasters for PO business loss	
Cost to BA of ACT transactions (580m @ 4p)	23 pa
Cost of ESNS system for 30% Rump of foils	c 30 pa
Compensation to subpostmasters for loss of private side profit	4 pa
Total	£345 pa

Net Benefit, Prima facie, to Treasury £130m pa

POL00031231

Other Cost Considerations

(I) ESNS - type system to prevent fraud in 30% "rump" may need around £100m up front capital investment.

(II) Set up costs for BA to implement compulsory ACT (DSS estimate) £50m.

(III) If banking account charges for customers were to be introduced and passed on to BA this would reduce the net benefit still further eg if credits and withdrawals matched in terms of frequency, a cost of 6p per transaction would eliminate the net benefit to Treasury.

(IV) Even the level of subsidy indicated would NOT guarantee the network since footfall loss would still hit subpostmasters and growing loss of confidence from clients would put other business at risk.

8.2 Compulsory ACT with post office closures (steady state at Year 5)

Savings	£ million
Remain as in 8.1	475 pa
Costs	
Costs to POCL of direct and indirect business loss before closures	£288m pa
Further business loss due to 5000 offices closing	£103m pa
Total income loss	£391m pa

Less cost recovery:

POL00031231

Crown business to SPSOs (500 closures) saving	£52m pa
BA business lost, recovery from SPSO remuneration	£76m pa
SPSO recovery from indirect business loss	£29m pa
SPSO recovery from business lost via closures (SPSOs)	£35m pa
Total cost recovery	£192m pa

Net cost to POCL £199m pa .... 199 pa

Cost to BA of ACT transactions	23 pa
Cost of ESNS system (30% Rump)	30 pa
Compensation for SPSO private side profit loss	3 pa
	£255m pa

Net benefit to Treasury £220m pa

Other considerations

In addition to the points made in 8.1 above;

(I) POCL would need to pass on a subsidy to (non-closing) SPSOs of around £64m pa.

(II) POCL face a compensation payment of c £148m (one off) to closing SPSOs (10,000 job losses)

(III) POCL also face EVR costs of £56m for 7,500 job losses in Crowns.

(IV) Even with a subsidy of £200m pa to POCL NETWORK IS NOW UNSTABLE

POL00031231

9. Other Impacts and Considerations

9.1 The coin mountain problem

POCL turns over the UK's total coin usage once per annum.

If we remove 60% of cash in hand business at Post Offices we create an imbalance on notes and coin coming in via remaining corporate deposits; bill payments; DVLA; BBC; Royal Mail and ability to re-circulate coin in particular.

NB: State benefits are rarely round numbers in pounds only.

Main impact for POCL is likely to be a coin mountain. 1992/3 evaluations suggested an interest loss of £20m pa. The main action POCL could take is to cease/severely reduce the cash purchases from Girobank, see below.

9.2 Impact on Girobank

Loss of c£30bN corporate deposits would reduce Girobank profit by at least £40m pa. This would prove critical and is likely to spiral into decline as their credibility in the market place deteriorates.

Unlikely to make much money from new personal accounts since these would tend to be low average holding and high frequency of usage.

NB: New partnership, profit sharing contract structure means POCL will, arguably, bear more of the brunt than before.

POL00031231

9.3 Impact on agents

In addition to direct loss of income there is a possibility that drop in footfall/BA traffic would have a proportional impact on their private business.

1992/93 work suggested around £4m pa impact on the net profit earned. This is probably still the best guess although it has always seemed on the low side.

9.4 Impact on customers

- Lack of choice (politically difficult!)
- Inconvenience of no "cash in hand"
- Cost, in some cases, of operating a low value bank account
- Further inconvenience of network closures

9.5 Compensation

Ostensibly, POCL's viability could be maintained via a direct grant from Government or an indirect grant via RM and a reduced Post Office EFL.

POCL would need (steady state) subsidy of £288m
of which, direct pass on to SPSOs would be £105m
plus SPSO private side £4m
to try to avoid office closures

With office closures POCL would need a
subsidy of £199million pa

but would probably have to pass on a
subsidy to SPSOs that didn't close of
around £64 million pa

plus private side c £3 million pa

But we would still have an unstable network

POL00031231

10. Impact on BA

10.1 Positives

* Compulsory ACT enables BA to operate a very inexpensive (4p v 40p) distribution method for up to c 70% of beneficiaries by 2002/3.

* Fraud reductions commensurate with ACT roll out

* Some admin savings (but c 250 million foils pa would remain)

* BA not "locked in" to POCL, except for 30% "rump" and more freedom for major restructuring of the welfare system

* Ability to reconcile accounts for 70% of market but for remaining 30% would need some form of ESNS or similar

10.2 Negatives

* POCL could/would up-price 30% rump

* Some system (eg ESNS) needed to protect 30% rump from fraud (but see also later treatment of this scenario in Annex IV)

* ACT difficult to audit trail re fraudulent claims which are said to account for over £1 billion pa

* Pressure from banks etc to introduce account charges. Political pressure from BA to bear these rather than claimants

* Secondary legislation needed - likely to draw public attention and concern

POL00031231

ANNEX I

Table 1

Millions	ACT					
	97/8	98/9	99/00	00/01	01/02	02/03
Current Volume projection (including Automation)						
Total Market	953.4	935.1	844.2	837.6	843.3	827.1
POCL	770.2	745.2	692	640	633.3	609.4
POCL Share	81%	80%	78%	76%	75%	74%
Income projection to POCL (include GG migration), and Automation (Outturn prices)	354	355.6	361.6	373.1	378.3	377.6
Income to POCL from Green Giros whether or not migrated (Outturn prices)	34-36	34-37	34-42	36-36	37-36	38-37
Total charges to BA	390	391	396	409	415	415

POL00031231

ANNEX I

Table 2

Millions	ACT					
	97/8	98/9	99/00	00/01	01/02	02/03
Volume assumptions with compulsory ACT reducing POCL to 30% share by 2003 (Commences April 1998)						
Total Market	953.4	935.1	844.2	837.6	843.3	827.1
POCL	770.2	707.9	622.8	511.7	380	243.8
POCL Share	81%	76%	70%	61%	45%	29%
Green Giro volume						
Current decay curve (Mill Tx) Share	54 100%	54.0 95%	41.6 89%	49.6 80%	49.1 64%	48.6 48%
Revised (Mill Tx)	54	47.9	42.4	39.7	31.4	23.3

Table 3

POCL Charges to BA

* Assume re-negotiated contracts with BA, including Green Giro migration, is based on 97/98 mix of fixed/variable prices

* Assume Finance charge varies with volume

£ million

Fixed (include GGs)	139.2	143	151.3	161.2	164.4	167.6
Variable	135.2	126.7	113.8	95.3	72.2	47.2
Finance (include GGs)	79.7	73.4	64.5	53.7	41.4	28.7
POPOS etc	2.0	2.0	2.0	2.0	2.0	2.0
Green Giros additional fixed fee	4.7	Inc above ← →				
@20p/Tx variable	10.8	9.6	8.5	7.9	6.2	4.7
Assumed Girobank fixed charge to BA	18.4	19.7	15.8	1.4	1.4	1.5
Total £m	390	374.4	355.9	321.5	287.6	251.7

POL00031231

ANNEX II

Projected Benefits to BA from (FAST) Compulsory Act

Table 4

	(Outturn prices) £ million					
	97/8	98/9	99/00	00/01	01/02	02/03
Current POCL and Girobank charges Including Automation	390	391	396	409	415	415
Assumed charges if ACT (Fast) introduced April 1998 (No automation) inc Green Giros	390	374.4	355.9	321.5	287.6	251.7
Savings in PO/Giro charges (Line A)	-	16.6	40.1	87.5	127.4	163.3
Fraud Reduction with Horizon Platform		29	87	)150))	150	150
ALPS(?)	40	40	40	)		
Admin Savings		14	88	100	100	100
Total (Line B)	40	83	215	250	250	250
Fraud Reduction with Compulsory ACT			30)))	80	90	105
ALPS	40	40	40)			
Admin Savings with ACT (92/3 work)		12	33	52	73	80
Costs of ACT implementation		(50)	-	-	-	-
Savings in Pathway costs (PAS; CMS; BES)		Rising	to	⟶	127	127
Saving via ACT (Line C)	40	2+	95+	132+	240	312
Line (A+C) - Benefit to BA of ACT	-	(64.4)+	(79.9)+	(30.5)+	167.4	225.3

POL00031231

Annex III

EVALUATION OF ACCELERATED VOLUNTARY ACT

1. Potential Methods for BA

- proactive promotion (ongoing cost of this to maintain effects)
- revised documentation (limited scope before this becomes overtly "unfair")
- incentivisation (probably needs to be c. £50 per person as a one-off cost)

2. Current ACT impact assuming Horizon continues

	98/99	2002/03
Total market (million transactions)	935.1	827.1
POCL share (million)	745.2	609.4
%	80%	74%

3. Compulsory ACT impact assumptions

	98/99	2002/03
%	76%	29%

4. Accelerated Voluntary ACT assumptions

	98/99	2002/03
POCL (million transactions)	738.7	554.2
%	79%	67%

POL00031231

N.B.

a) Current ACT decay ~ 1% per annum; we assume acceleration would triple this.

b) Assume Contract A with BA holds up

5. Impact of acceleration

Impact of acceleration results in 55.2 million transaction loss at Year 5 below current trend

6. Impact on POCL

a) Contract A "floor limits" on volume protect income to POCL. Thus no direct income loss on transaction or finance charge. (Otherwise this will have meant £11m off transaction price)

b) Impact on Financial Inpayments; Savings; Corporate Banking; Mails and Lottery are estimated to be c. 1.5%. Approximately £12m income. (Assuming 70% went through SPSOs there might be an operational saving of 60% of 70% of £12m = £5m)

c) Drop in volume represents c. £4.5bn drop in cash requirement. Whilst this does not affect the finance charge (because of Contract A), this would otherwise be worth c. £9m in price reduction to BA. We would expect to recover part of this at least from the Girobank contract

d) Reduction of 55.2 million transactions is likely to be worth c. 12p per transaction to SPSOs. This equates to c. £6m cost saving to POCL

POL00031231

7. Impact on Pathway

a) Volume reduction 55.2 million x 10p (assumed transaction charge) = £5.5m

b) CMS reduced charge of approximately £1m

c) Therefore Pathway lose £6.5m from a £130m (from BA) and £65m (from POCL) contract. Although unwelcome, hardly grounds for a threatened withdrawal!

8. Impact on BA

a) Reduced charge from Pathway of £6.5m p.a.

b) Extra cost of 55.2 million on transactions on ACT at, say, 4p $\simeq$ (£2m p.a.)

c) Net saving of £4.5m needs to fund promotional activity and incentives

E.g. This represents 860,000 extra people adopting ACT. At £50 incentive this will cost £43m as a one-off investment

9. Impact on Treasury

In addition to BA benefits:

a) £4.5bn funding would reduce to monthly in arrears (as already happens with ACT). Assuming 2p per £100 per night as the interest gained, this represents:

$$\frac{£4.5bn}{365 \text{ days}} \times 21 \text{ days} \times \frac{2p}{100} = \textbf{£51m}$$

POL00031231

Conclusion

1. POCL remains protected on income as long as Contract A holds

2. POCL lost foot-fall effect is small and is offset by reduction in payment overall to SPSOs

3. There must be a query on longer term impact on POCL

4. Pathway face a £6.5m reduction in income which whilst undesirable should not lead to Horizon cessation

5. BA appear to make a relatively modest saving of around £4.5m from which they have to fund promotion and incentives

6. However, Treasury could make c. £51m p.a. saving in "lost" interest through the move to monthly payment in arrears

Key Message

There is a case for BA (pressed by Treasury) to pursue ACT promotion whilst continuing with Horizon and POCL Contract A

POL00031231

ANNEX IV

Could BA find a way of making ACT available and acceptable universally?

1. Introduction

This scenario assumes that BA have pulled out of Horizon and have persuaded Ministers to go down ACT route. Previous BA view is that a residual beneficiary group (could be 30%) will not wish to, or be accepted by banks to, open a usable current account and therefore not be able to receive benefits through ACT.

However, BA need to tackle this problem in order to avoid running the fraud-prone order book system indefinitely.

2. The Customer Profile

May break down in two types:

a) Those who don't need a bank account

- o Elderly/disabled, who use POCL
- o People who are totally cash orientated

b) Those who can't get a bank account

- o insecure incomes, perhaps irregular periodicity
- o bad risk customers

Those who are currently very cash oriented are likely to continue to manage through cash as a means of organising their affairs.

On the assumption that the unbanked/conscientious objector stabilised @ 30%, we could deduce say 200-240 million transactions pa, or perhaps some 3 million customers left with foils after the cumulative effect of BA's five year transition to compulsory ACT (say year 2002-3).

POL00031231

3. Options for BA

3.1 Mandate private sector banks to accept 30% "rump" of foil beneficiaries.

(This is a most unlikely scenario, full of political banana skins as well as carrying likely costs of account handling for consistently low value accounts).

3.2 Mandate POCL to open and operate a form of account to enable these beneficiaries to be removed from the foil-based system.

3.3 Identify any commercial "white space" opportunity within the retail sector.

The latter two are scoped below.

4. POCL extended role

4.1 POCL could be mandated by Ministers to operate a form of account for beneficiaries. In turn POCL would probably sub contract to Alliance and Leicester to operate the accounts.

4.2 This would enable BA to ostensibly operate ACT throughout and therefore eliminate foils.

4.3 The means of payment could be a cheque system BUT OPERATED FROM AN AUTOMATED ON LINE PLATFORM TO CONTROL FRAUD.

4.4 Smart cards for beneficiaries would be tighter but again would demand an on-line automated system.

4.5 Since the 30% rump would be spread throughout the UK, the automated platform would be required everywhere.

4.6 POCL would/could not contemplate a paper-based payment system replicating the current BA foil with all its costs and fraud propensity.

4.7 Conclusion: POCL could enable foils to be eliminated but only through an approach not unlike Horizon.

POL00031231

5. A new threat to POCL?

5.1 There is a competitive threat only just off the radar, which already has some elements of a rival infrastructure in place: BA could encourage a retail/bank consortium to take on ACT for "low network" customers.

- o model could be Sainsburys/Royal Bank of Scotland

Sainsburys are cash rich from store operations. If they could close the process loop with their banking partners, then:-

(a) reduce cost to themselves of corporate deposits

(b) provide mutual supporting commercial activity footfall <---->customer retail access

(c) would have a platform to invade the "higher net worth" customers in the (other banks) 70% of ACT beneficiaries.

5.2 BA --- Bank --- Retailer as a business model that displaces POCL distributor network

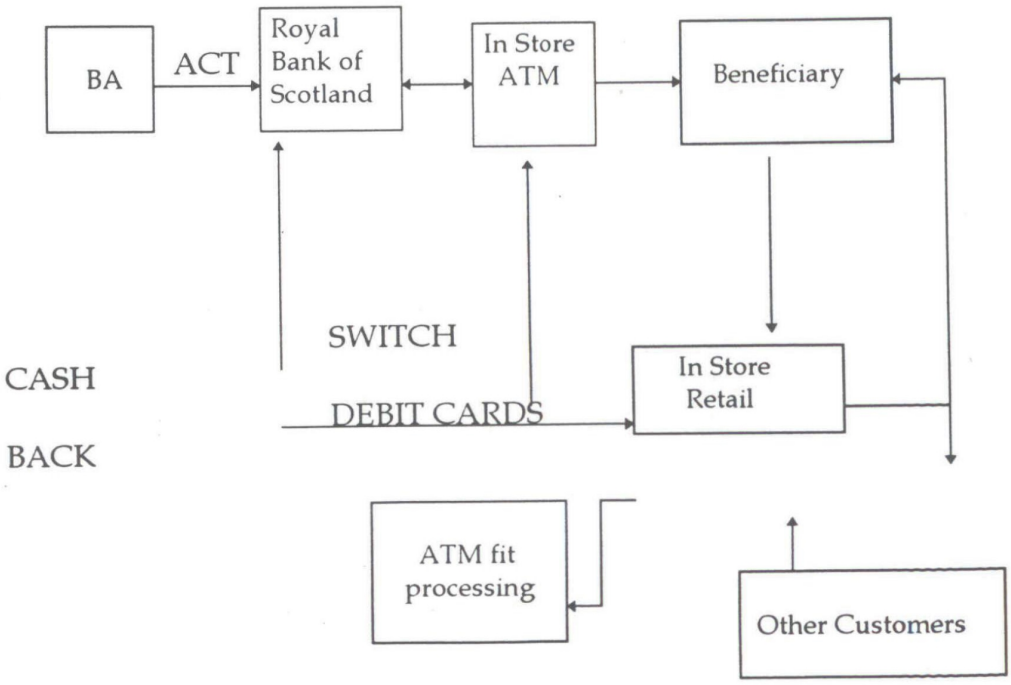

POL00031231

5.3 Conclusion:

Whilst this option could well materialise it is far more likely to focus on the higher worth 70% ACT switchers than wishing to concentrate on the 30% "rump".

POL00031231

ANNEX V

General Benefit of ACT to BA

1. BA pay high street banks to transfer a credit to a customer. This is relatively low cost, (say 4p a transfer). If BA can:

   (a) combine benefits onto a customer in their internal system

and (b) continue to combine, streamline benefit groups, look at periodicity

They can reduce the number of "credits-to-customer bank account" they make. But this is a trade-off dependent on cash flow and interest rates, and BA will probably send transactions to ACT on the due date. (Just in time).

Note: If all (say 800 million) transactions were paid J.I.T then bank charges (ACT) to BA approximately £32m pa.

The crucial factor is the average value of a credit, which would make it cost effective to aggregate and pre-pay small amounts of benefit to save the 4p. txn charge ..... not a very big prize however .....

2. Conclusion .... the high txn charge from POCL makes it attractive to aggregate benefits and periods to reduce transactions. This would not drive to the same extent under ACT.

3. ACT allows BA to outsource functions/problems to the bank/retailer

   - the number of customer "drawings'" on the account is invisible to BA, and does not impact cost to BA.

   - the link to Banks is electronic/secure and fraud in transmission is assumed to be eliminated.

POL00031231

- the service with banks allows the banks systems to combine benefits to customers ... that is, the functionality of CAPS (for payment) is outsourced but BA may still want CAPs to take "whole customer" views, and scrutinise for probity etc.

- However, reconciliation of "benefits due" to benefits transmitted becomes 100%. Benefits drawn is not an issue.

4. So far, the "value of a customer" is assumed to be positive for the High Street bank (positive average current balances, cross-selling opportunities etc), even after the marginal cost of ATM transactions, internal accounting and processing and crucially, the sourcing and handling cost of cash is taken into account.

POL00031231

Appendix 8

OUTPUTS FROM SCENARIO DEVELOPMENT MEETING
10 September 1997

SCENARIO 7
PRELIMINARY ASSESSMENT
7a OBCS ONLY:

- Same kit, only one service
- Maybe start (3 months?) earlier - training less
- Less complex, more robust (?)
- Gives back-end nothing - no replacement of cash account
- Doesn't replace other systems and takes up large footprint
- Non-BA clients - irrelevant
- For BA:
    - meets most of fraud reduction
    - gives account reconciliation (next release)
    - doesn't permit major infrastructure savings
    - but reduces PAS/CMS charges
    - BA & POCL retain archaic payment system
- For BA & POCL:
    - query on long-term relationship
    - BA start actively seeking alternatives
- Scaled down management - easier service management

POL00031231

SCENARIO 7
PRELIMINARY ASSESSMENT
7a OBCS ONLY: FINANCIALS

- Unit cost from Pathway would rise (2x?) negating some of BA avoided cost

EFFECTS

- BA:
  - likely not to save much from Scenario 1
- Pathway:
  - some development savings
  - lower volume, not fully offset by higher prices
  - little strategic benefit
- POCL: (Tactically OK, long term nasty)
  - difficult negotiation - likely decline from Contract A (£20m?)
  - £65-80m pa saving on EPOSS/AP
  - £10m AP catch-up
  - have to maintain existing systems
  - no back-end benefits (e.g. ADS)
  - no strategic benefits
  - other lost auto-dependent benefits
  - more difficult to develop later

POL00031231

SCENARIO 7

PRELIMINARY ASSESSMENT

7b OBCS & AP ONLY FUNCTIONALITY - DIFFERENCES FROM 7a

- Start times similar to Scenario 1 (otherwise similar to 7(a))
- Existing APTs released
- Benefit for bill payment clients

FINANCIALS

- Pathway unit costs not rising as much
- BA:
  - bit better - Scenario 1, at best
- Pathway:
  - Better returns but < Scenario 1
- POCL:
  - replace Hybrid platform
  - trading off cost of AP investment and maintenance against Pathway charges increasing due to overall volume reduction - threatens bill payment business for POCL

POL00031231

SCENARIO 7
PRELIMINARY ASSESSMENT
7c OBCS/AP/EPOSS

- Kit; timescales; training broadly as Scenario 1
- Slightly less complex (no CMS card)
- Feeds TIP/ADS therefore benefits protected
- Replaces other systems
- Enables bill payment development
- Non bill payment/BA clients - no value (except Royal Mail?)
- For BA:
  - gives fraud protection
  - account reconstruction
  - no major infrastructure savings
  - reduce PAS/CMS costs
  - archaic payment system
- For BA & POCL:
  - long term problems remain
- For POCL:
  - no Hybrid residuals
  - bill payment OK - but price?
  - Royal Mail postage of books protected
- Pathway:
  - volume reduction from Scenario 1 - but some development cost saving

POL00031231

SCENARIO 7
PRELIMINARY ASSESSMENT
7c ASSUMPTIONS

- POCL still pick up Pathway EPOSS charges therefore no positive business case impact
- No strategic "other client" benefits
- Possibly small Contract A effect (e.g. loss of cards)

7d B.P.S. ONLY

- Same kit, one service
- Start same time, training earlier
- Slightly less complex overall (no EPOSS)
- No back-end benefits
- No "non-BA" client benefits
- For BA:
  - fraud plan delivered
  - reconciliation
  - infrastructure and order book savings
  - may have to pay increase charge per unit
- For Pathway:
  - reduced volume
  - savings in AP/EPOSS development
- For POCL:
  - lock in BA
  - otherwise disadvantage
  - cost as per 7(a)

POL00031231

SCENARIO 7
PRELIMINARY ASSESSMENT
7(a) - 7(d) - CONCLUSIONS

- Anything less than full functionality reduces Pathway volume, and therefore increases unit costs/charges

- Without EPOSS we seem to have price benefit (c. £65-80m illusory?), but lose back-end benefit and bear cost of hybrid systems maintenance as well as lose strategic opportunities

- Any single "part-functionality" looks questionable but... part functionality in segmented network may have a solution, needs scoping

- After scoping (crudely) does not appear viable

POL00031231

CAR PARK ISSUES ARISING FROM OUTPUTS ON 12 SEPTEMBER '97

- How would it be different without PFI?
- What "transaction" is captured by EPOSS?
- Work already done on automating non-cash account offices (Mena)
- ADS WIP on manual data capture (Pete Curtis)
- Reference data status

POL00031231

PARTIAL HORIZON NETWORK

Implications	So What?
• Dual system (foils + cards) for BA: - admin savings + fraud savings diminished but some saving on Pathway charges	• Probably unacceptable to BA - at best accelerates ACT
• Need to restructure cash account to maintain accounting integrity: - two back-end systems unacceptable	• Probably unacceptable to POCL
• May be possible to "buddy" smallest 4000 (1% of business) onto automated offices therefore card throughout	• Subject to Pathway savings in roll-out and service support (POCL's share to cover extra costs)

DUAL SYSTEMS INCREASE OPERATING COSTS WITHOUT SUFFICIENT OFFSET IN HORIZON COSTS

POL00031231

PARTIAL FUNCTIONALITY

Options explored included OBCS only; OBCS + AP; OBCS + AP + EPOSS; EPOSS only; BPS only

Implications	So What?
• OBCS → BA locked into foils therefore ACT inevitable - Horizon platform (two costs) remain - Card development/running cost savings - implication Pathway unit charges escalate	• Probably not acceptable to BA unless mandatory ACT • Not acceptable to POCL (inflexible; ACT risk) and does not lock in BA
• EPOSS only - Horizon costs etc - no flexibility	• Loses BA lock in - unacceptable
• BPS only - unit cost from Pathway!!	• Unacceptable to all

VERY EXPENSIVE SOLUTION TO THE WRONG PROBLEM

POL00031231

DESCRIPTION OF THE AGREEMENTS AND CONTRACTS

1. Purpose of this Paper

The purpose of this paper is to describe in outline the suite of contracts between DSS, ICL Pathway, POCL and SSA.

2. Preamble

In August 1994, Department of Social Security (DSS) and Post Office Counters Ltd (POCL) placed an advert in the EC Gatt journal to procure Computer and Data Services to automate post offices and benefit payments. The services provided by ICL Pathway in the three Related Agreements as the titles to the contracts state cover the provision of computer and data services through various individual services. Of themselves they do not provide nor substitute for the services POCL provides to DSS and Social Security Agency (Northern Ireland) (SSA) under Contract A.

3. 2.1 Contract 1 - The Authorities Agreement

Is jointly held by DSS and POCL (The 'Authorities') with ICL Pathway (the supplier). It's principal aim is to provide a seamless set of IT data services for DSS and POCL e.g. that the services and infrastructure provided works from end to end. The charging schedule for Contracts 2 and 3 is also held here.

4. 2.2 Contract 2 - DSS Agreement

Is for the provision of a Card Management Service, CMS (to produce and get cards to beneficiaries, place stops on them, ensure they are only used by the authorised holder) and a Payment Authorisation Service PAS, which holds details of a person's entitlements until encashment is requested at a post office.

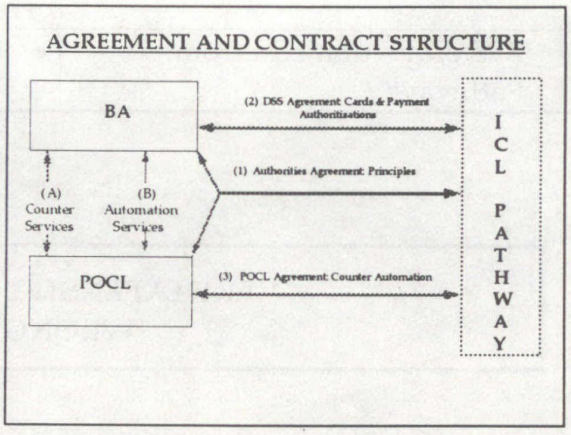

5. 2.3 Contract 3 - POCL Agreement

Is for the provision of an automated Post Office network infrastructure (to be known as 'Horizon'). The network will be connectable to other POCL systems and client systems (e.g. BA) via a 'switching' service known as Transaction Management Service, TMS. At each post office outlet the following electronic services are to be provided:

Benefit Encashment Service (enabling a payment card holder to encash benefits), Automated Payment Services (enabling customers to pay bills, recharge utility meter tokens etc.) and

POL00031231

Electronic Point of Sale service (to facilitate post office outlet accounting)

Since the award of contract in May 1996, DSS has placed an order through its Contract B with POCL for POCL to exercise an option under contract 3 for ICL Pathway to provide an

Order Book Control Service (to check the validity of an order book). An early version of this has already been delivered.

POCL has the option to procure further optional or additional services from ICL Pathway e.g. Mail Services and Smartcard Services.

6. 2.4 Status of SSA contracts

Due to an oversight in the original EC Gatt advert for the PFI procurement, SSA do not have a direct contracting relationship with ICL Pathway. Through a Service Level Agreement with DSS, DSS will procure PAS and CMS services for SSA in Northern Ireland. SSA do have a Contract A for Counter Services and a Contract B with POCL to pay for IT data services provided in Northern Ireland.

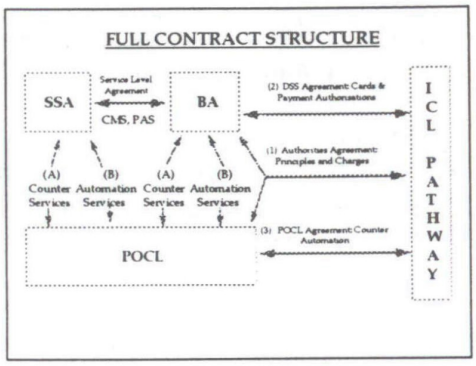

7. 2.5 Contract A

The services provided under Contract A by POCL to DSS and SSA are the provision of approximately 19,200 post offices and 65,000 staff and agents to encash benefits, transport and arrange the money to pay out customers, account and settle for benefit payments, audit provisions, the distribution of leaflets to claim benefits and the provision of publicity space. The provision of electronic stop notice systems at post offices.

8. 2.6 Contract B

ICL Pathway will be charging POCL for all the services it provides under contract 3. DSS and SSA have agreed to pay the charges that relates to benefit encashment data and its transmission. (Note, Only DSS will be paying for OBCS as it is not required in Northern Ireland). Contract B is structured so as POCL receives payment from DSS and SSA in time for it to pay ICL Pathway.[1]

9. 3 CHARGES AND FURTHER DESCRIPTION AND DETAILS OF CONTRACT B

POCL procures and pays for the following services from ICL Pathway (the Related Agreements Contractor) :-

[1] Note AP charges will be covered through existing client contracts as APS replaces current POCL iT systems. It is expected that as other POCL clients re-engineer their products they will also pay the charges POCL incur from Pathway potentially through their own 'contract B'.

POL00031231

1) Benefit Encashment Service (BES)
2) Order Book Control Services (OBCS)
3) Automated Payment Services (APS)
4) Electronic Point of Sale Service (EPOSS).

In order to provide assurance to DSS and SSA that POCL is only recovering the charges levied for the electronic services ordered by DSS (i.e. no cross subsidy between BES/OBCS and POCL's other services) openness was built into the overall charging structure of contracts 1, 2, 3 and B.

10. 3.1 Charges, Discounts and Guarantees in the related Agreements

Both DSS and POCL have provided money value guarantees to ICL Pathway (under contracts 2 and 3) as part of the private finance initiative contract. There are 3 guarantees,

- a CMS and PAS guarantee by DSS to ICL Pathway under contract 2
- an other POCL services guarantee (APS, EPOSS) to ICL Pathway under contract 3 and
- a BES/ OBCS guarantee by DSS to POCL under Contract B which is passed through to ICL Pathway under Contract 3.

The charges are levied monthly by ICL Pathway and are based on the usage of the equipment, network and communication infrastructure provided. Each transaction that POCL performs uses different elements of the Horizon platform, e.g. an order book check uses the bar code reader, a card payment uses a card reader, both use the transaction and stock recording element of the processor. The various bits of the equipment and communication network each have a predetermined 'service point' score. Therefore each transaction carries a certain number of service points according to what bits of the system the transaction makes use of.

Depending on how many points are used in total within a year, the price of each service point varies according to discount bands of usage (the more points, the lower the cost).

In summary, subject to meeting the guarantee payments, the charges are based on usage of the system (calculated by multiplying the number of transactions by their service points value). If enough use is made of the system, the price per service point is reduced.

3.1.1 Adjustments

Adjustments to the charges for either guarantees or discount bands is made on the final invoice of the year.

11. 3.2 Charges under contract B

Charges to POCL from ICL Pathway under Contract 3 are invoiced separately

1) for BES and OBCS
   i) for DSS data to GB post offices
   ii) for SSA data to Northern Ireland post offices
2) Other POCL Services

POL00031231

A summary of the invoices is also provided by ICL Pathway to POCL in order to calculate Discounts.

Under Contract B, within 7 days of POCL receiving an invoice from ICL Pathway, a copy of it together with the BES and OBCS detail pages is sent to DSS. POCL then prepares its own invoice and sends it to DSS for the BES and OBCS elements. DSS then pays POCL at least one banking day prior to the day that POCL is required to pay the total ICL Pathway invoice.

12. 3.3 Back to Back issues

In a similar way that the BES/ OBCS guarantees are passed through Contract B there are other pass through rights and obligations in Contract B. If either DSS or POCL suffers a loss which it is unable to pursue through its own contract with ICL Pathway but it is available to the other party, then Contract B provides for the former to act on its behalf in pursuing the grievance. The extent of liability is limited to that which the acting party can extract from ICL Pathway.

Likewise should ICL Pathway seek redress from either DSS or POCL and the reason for the default lies with the other party, the failing party is liable to the other under Contract B.

There is nothing in Contract B that prevents the payment of benefits to individuals. Should the parties decide to cancel Contract B, although the option to terminate Contract A accrues, both parties could agree to continue contract A and manual methods of benefit payment continue.

POL00031231
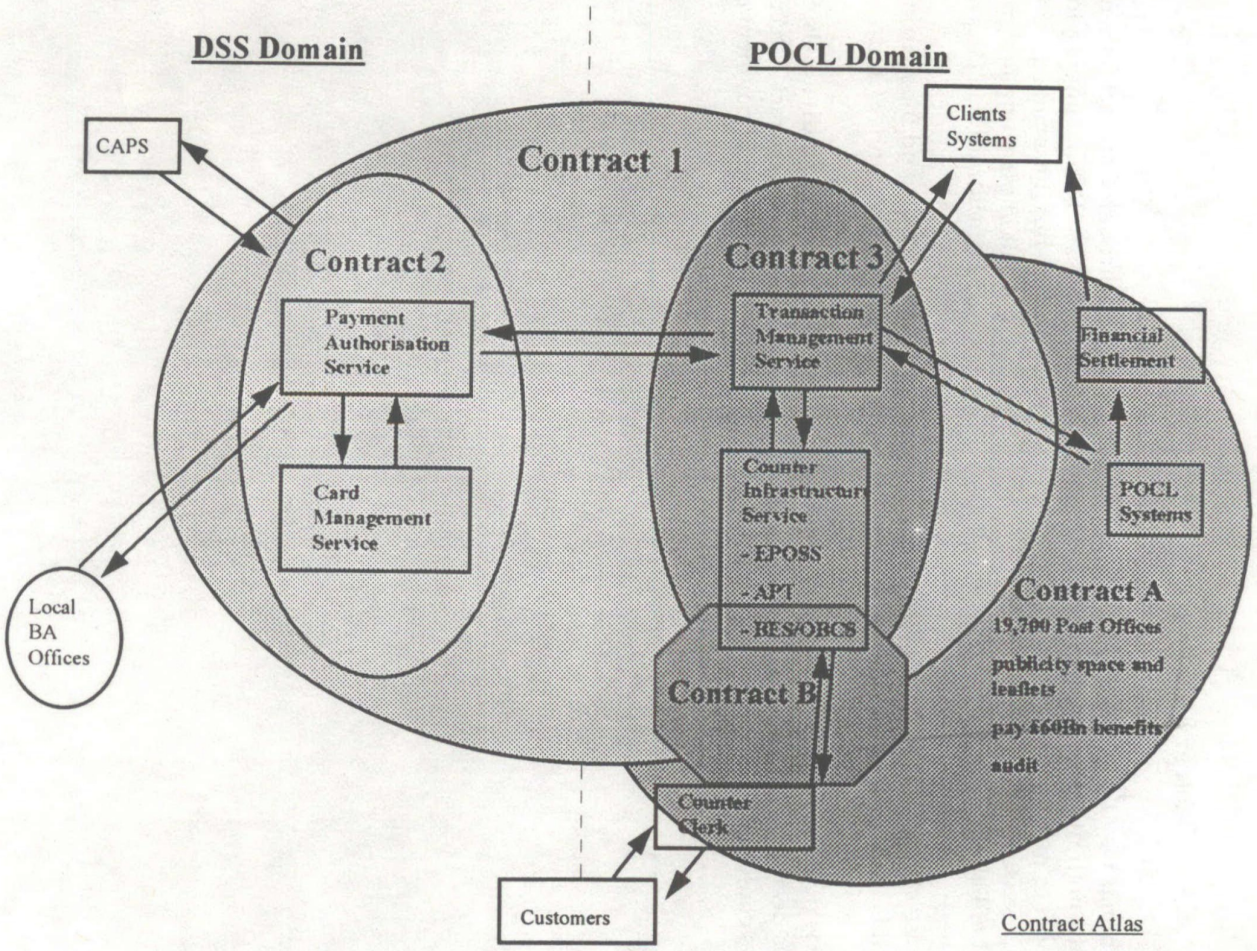
Annex A